ANT1 LB+N78N79

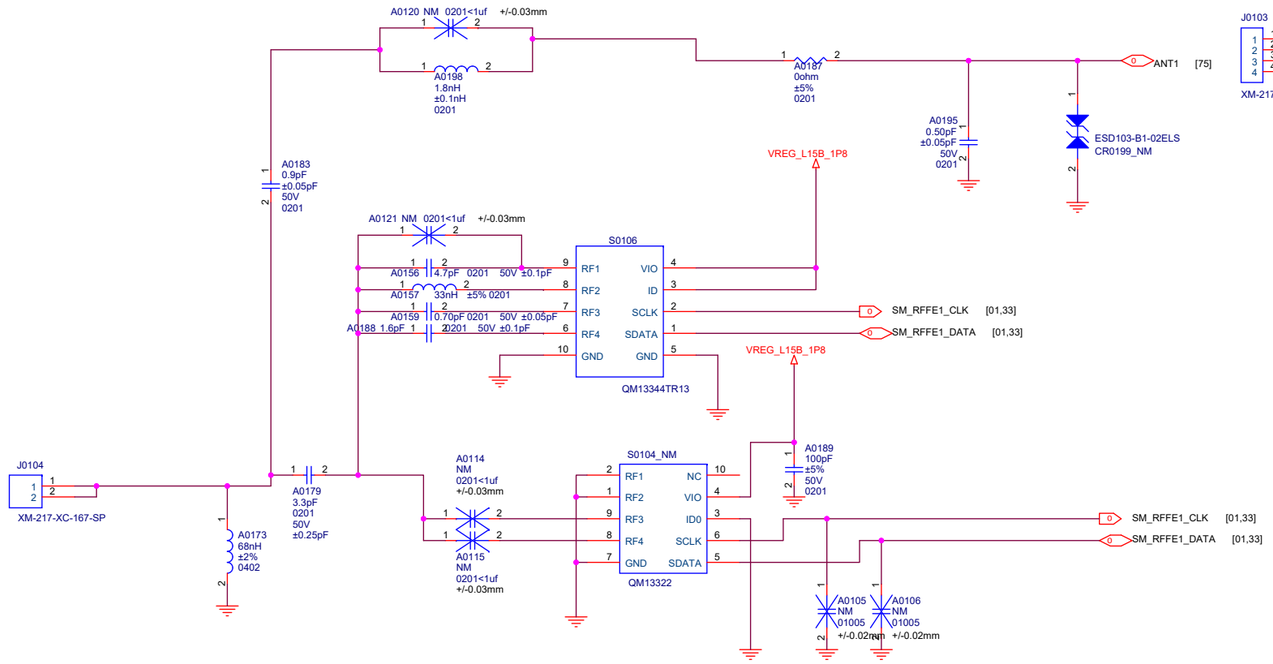

ANT4 MHB

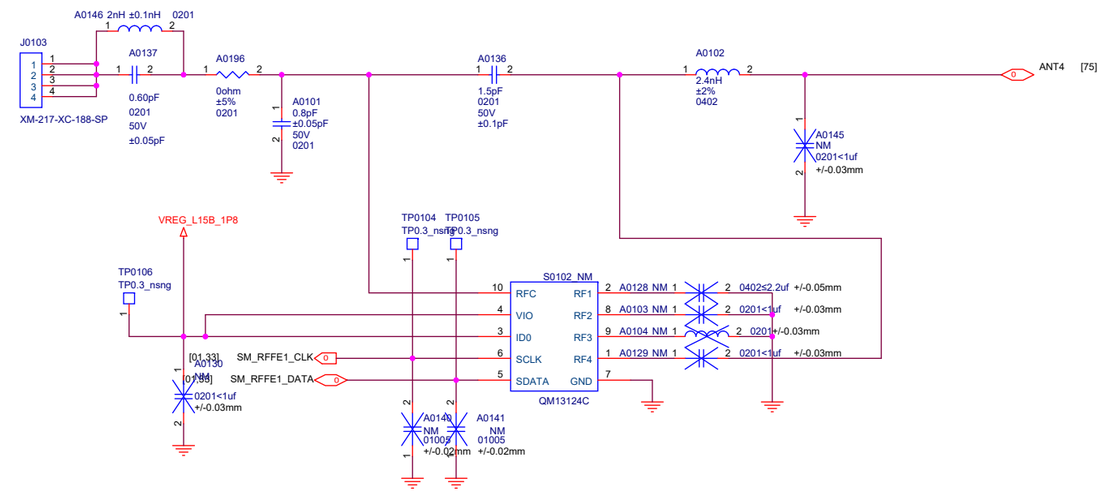

ANT10 N78/N79

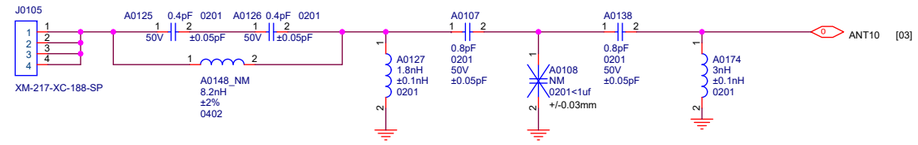

ANT6 MHB+B32

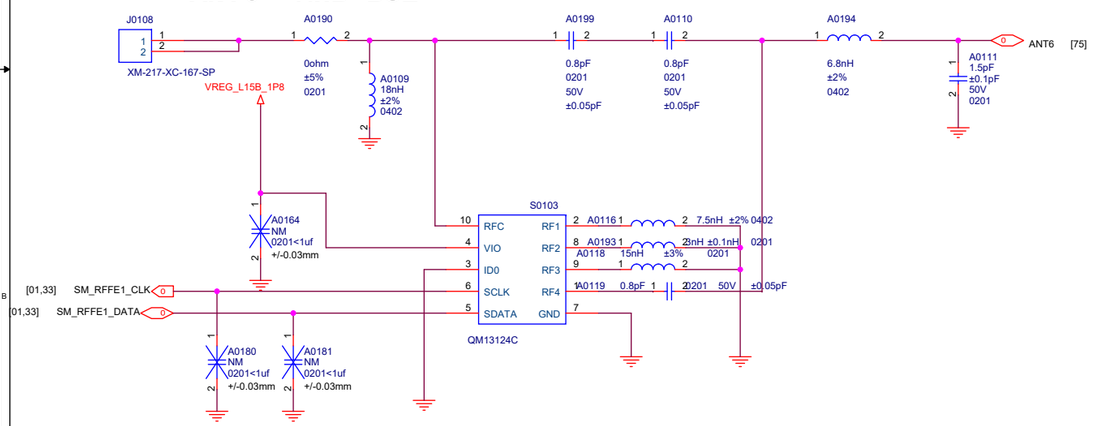

MAIN PCB GND

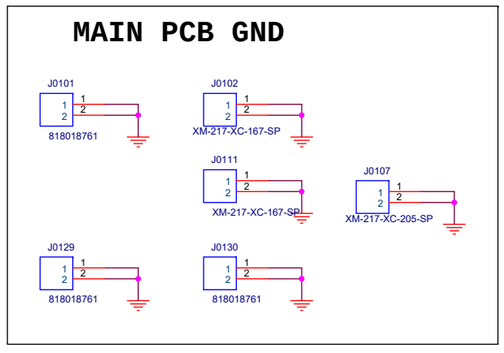

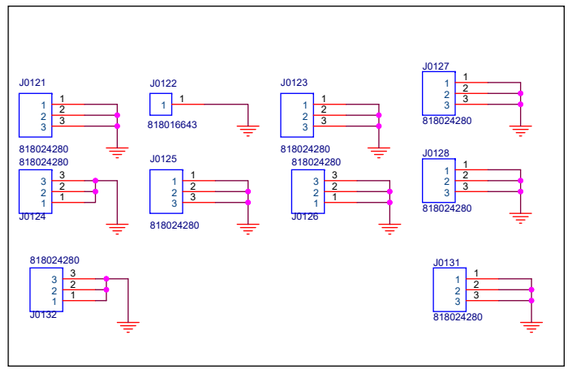

SAR SENSOR2

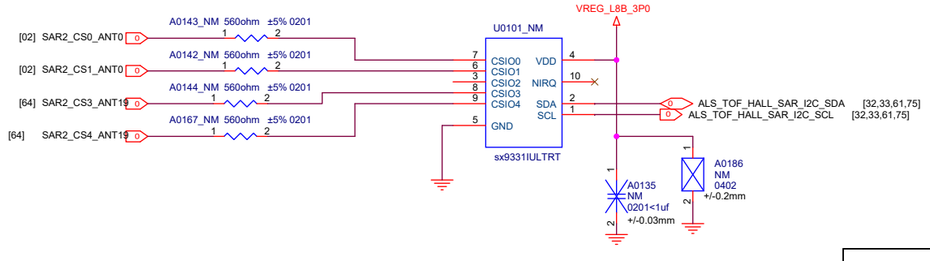

Title	M2_MAIN	
Size A2	Document Number ANT1	Rev
Date: Friday, September 16, 2022	Sheet	

ANT3 MHB

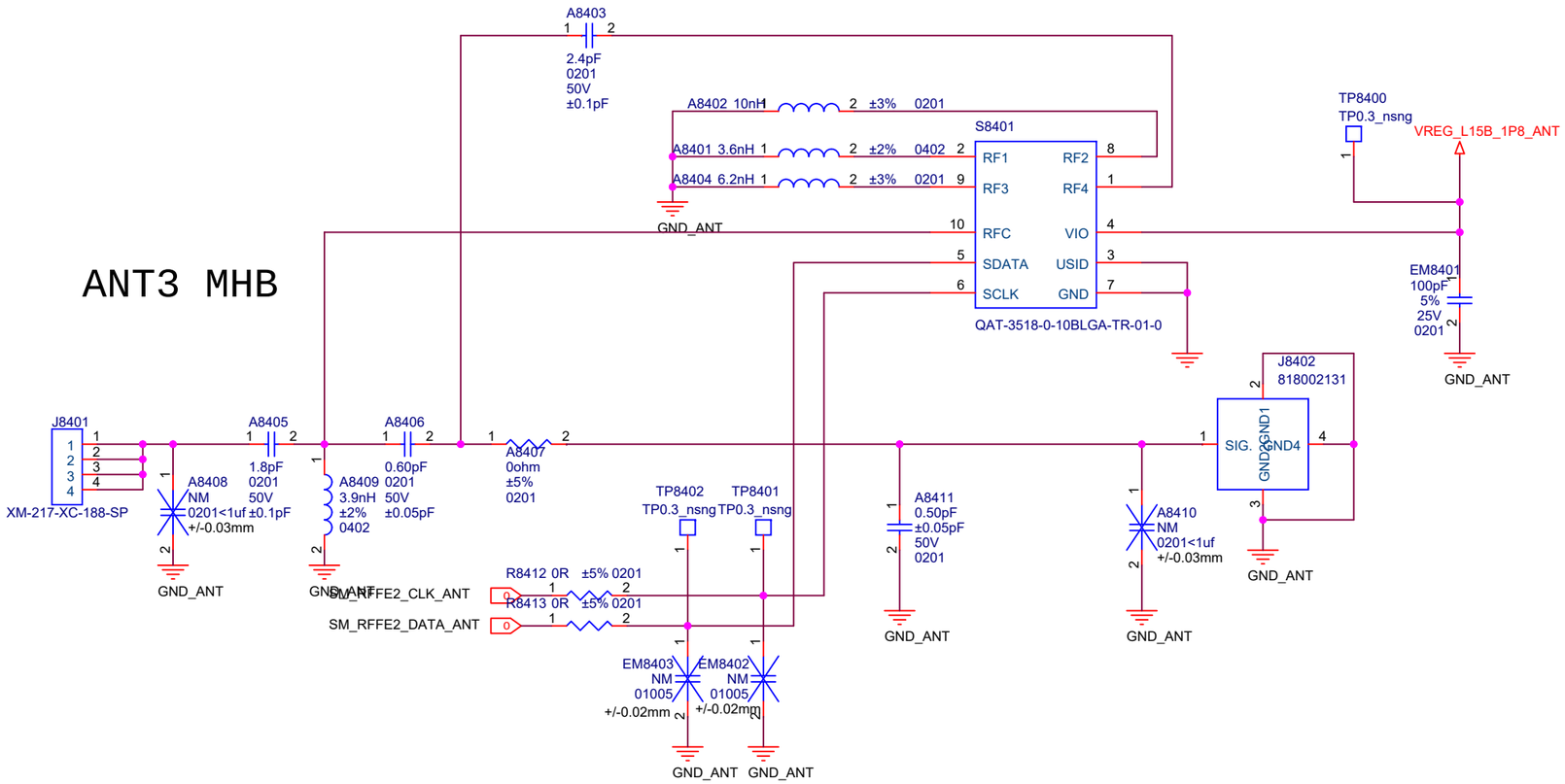

ANTENNA BOARD ID

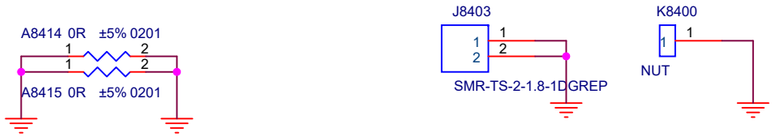

Title	M2_MAIN	
Size A3	Document Number ANT1	Rev
Date: Friday, September 16, 2022	Sheet	

ANT0_LB1+N41

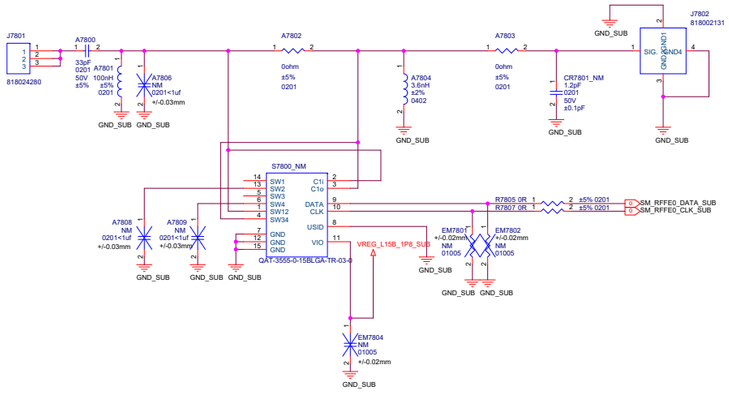

ANT0_LB1+N41

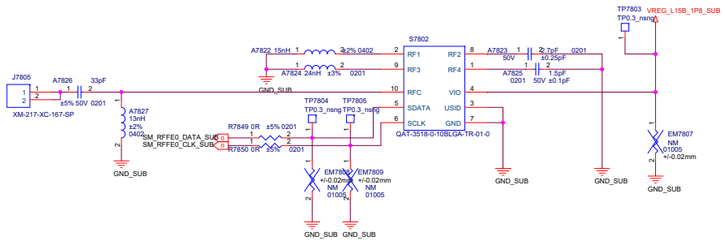

ANT0_LB1+N41

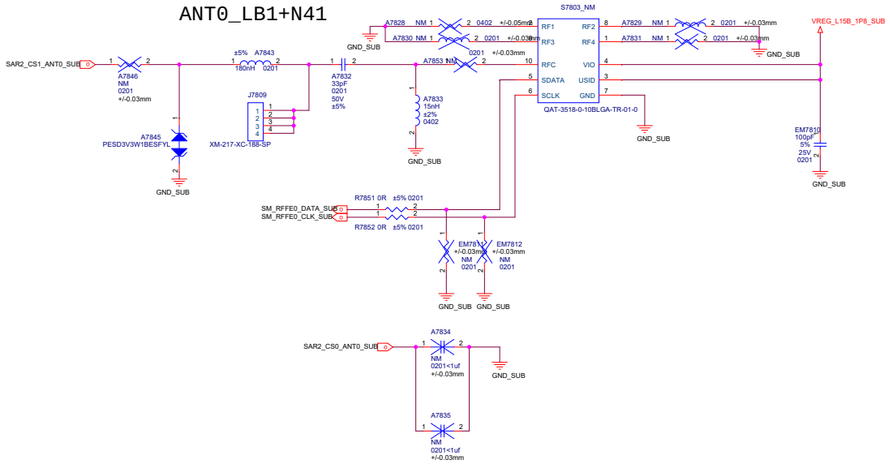

SAR sensor1

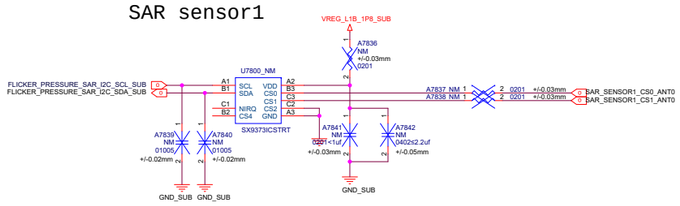

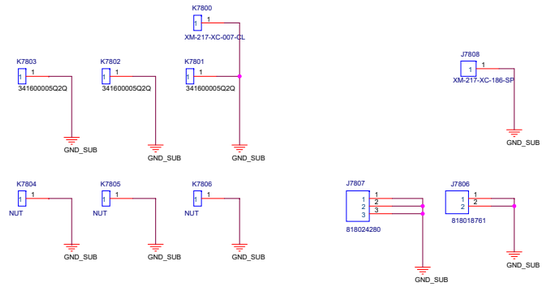

EMC_RUBBER

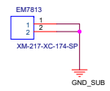

Title	M2_MAIN	
Size A1	Document Number ANT1	Rev
Date: Friday, September 16, 2022	Sheet	

ANT15 GPS L1+WIFI2.4 CHAIN0 B32

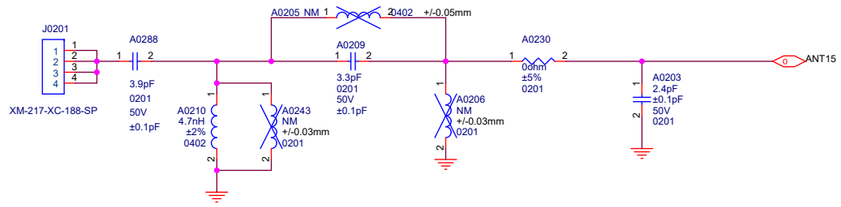

ANT18 WIFI_2G_CH1_6E_CH1/CH3

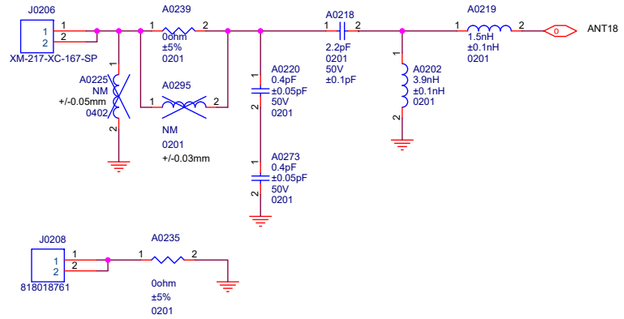

ANT19 GPS L5

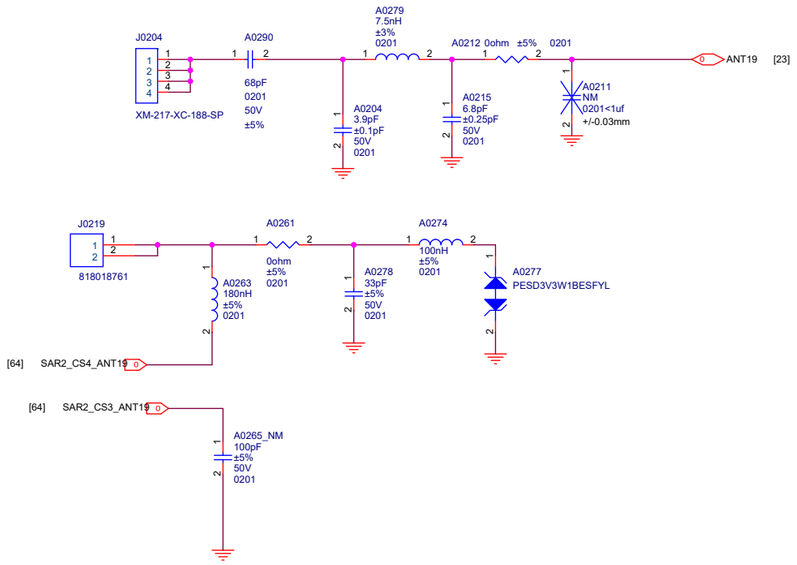

ANT5 MHB+LB3

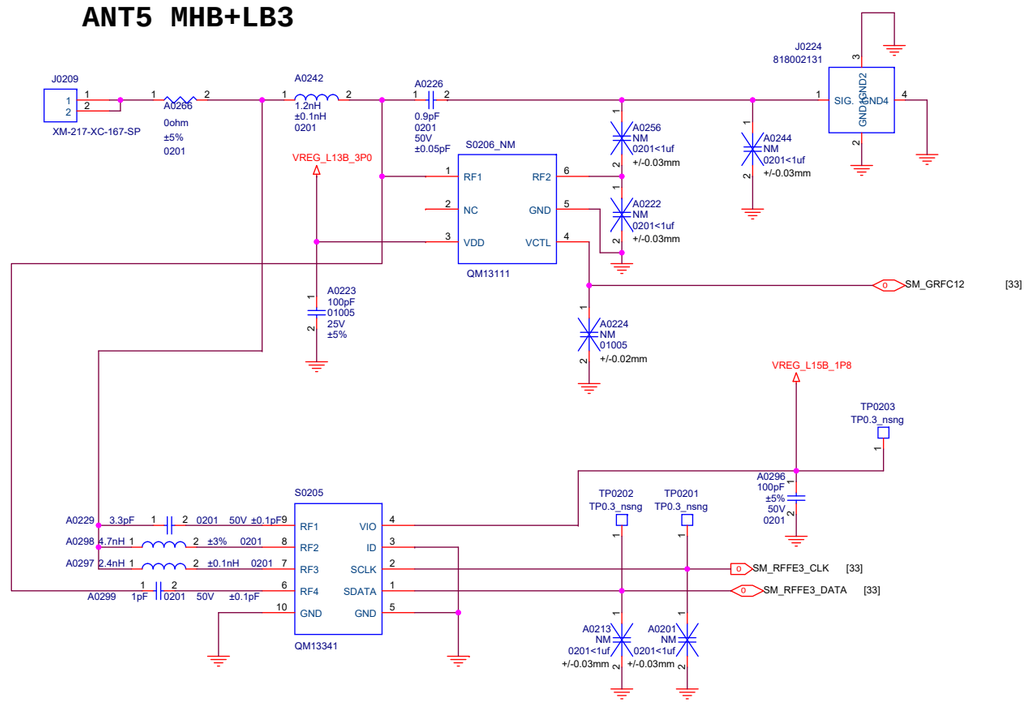

ANT17 WIFI_6E_CH0/CH2

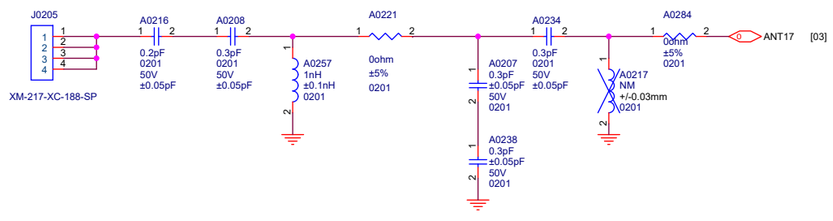

ANT13 N79

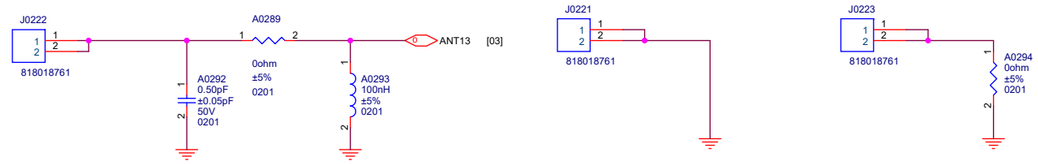

Title	M2_MAIN	
Size A2	Document Number ANT2	Rev
Date: Friday, September 16, 2022	Sheet 02	

MAIN MIC

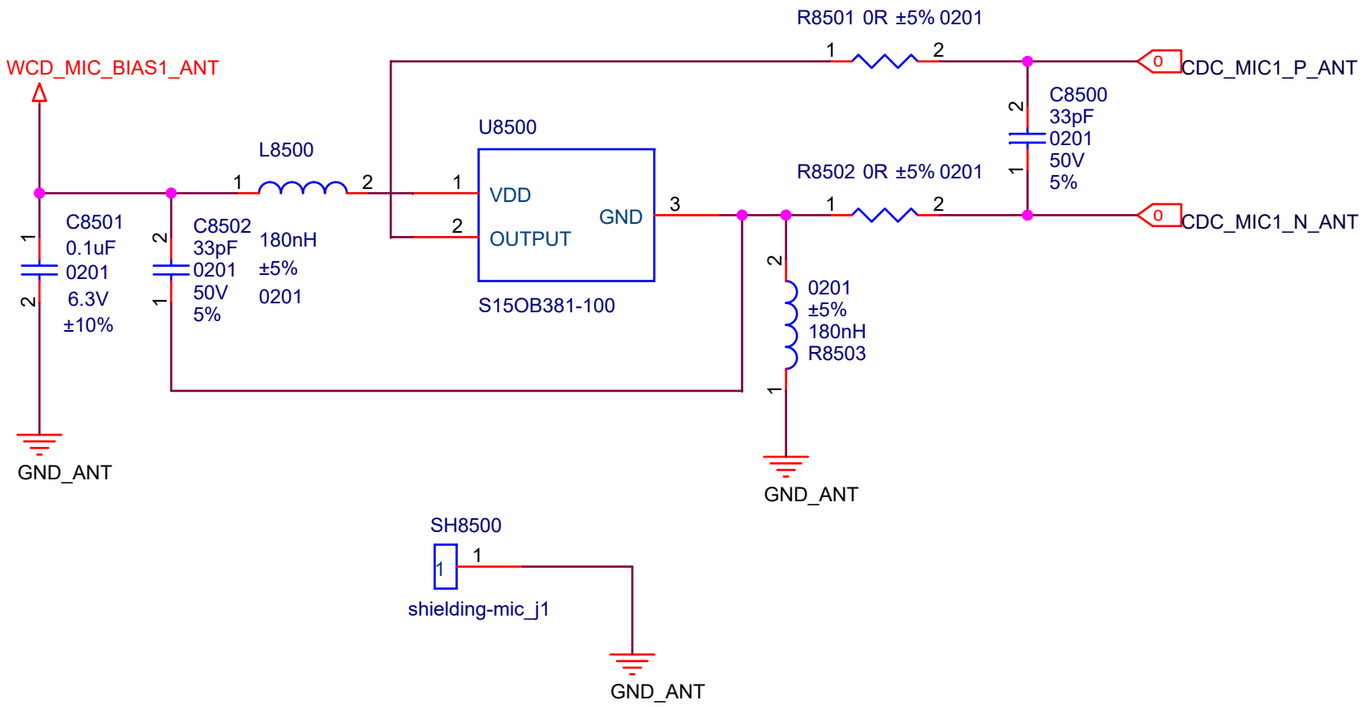

Title	<Title>	
Size A4	Document Number <Doc>	Rev
Date: Friday, July 29, 2022	Sheet	

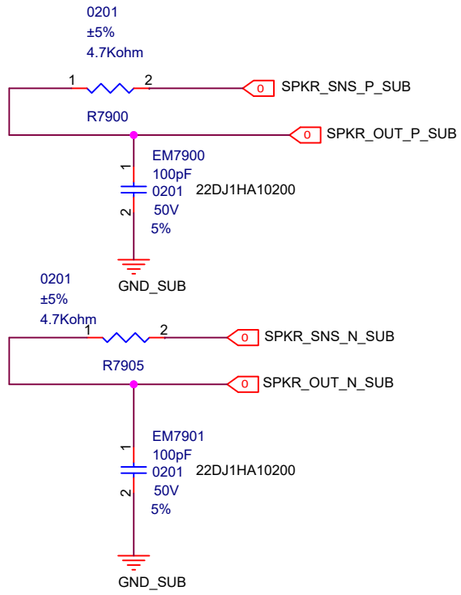

Title <Title>		
Size A3	Document Number <Doc>	Rev
Date: Friday, July 29, 2022	Sheet 2 7	

WIFI+GPS_B32

ANT10
n77/n78/n79 TRX

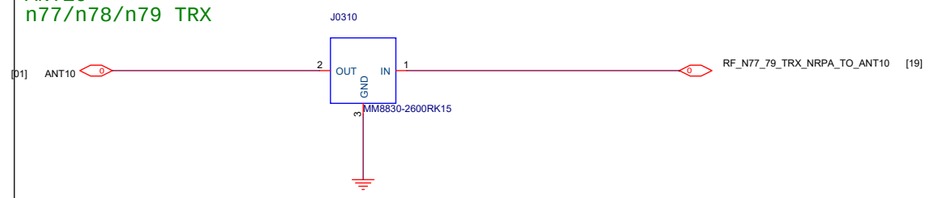

ANT15 GPS L1+WIFI2.4 CHAIN0 B32

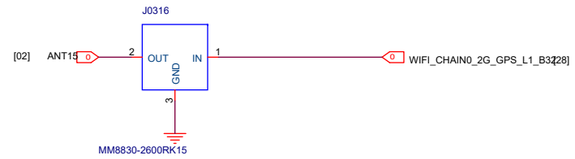

ANT17 WIFI 6E CH0/CH2

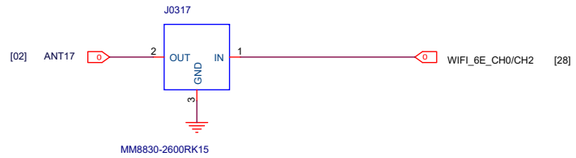

ANT18 WIFI_2G_CH1_6E_CH1/CH3

ANT13
N77/78/79 DM

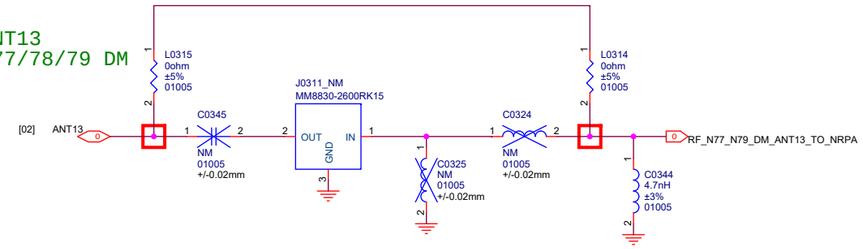

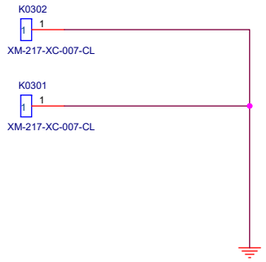

Title	M2_MAIN	
Size A2	Document Number RF_CONN	Rev
Date: Monday, August 22, 2022	Sheet 03	

HALL

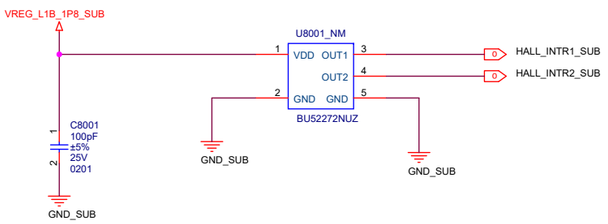

HAPTICS

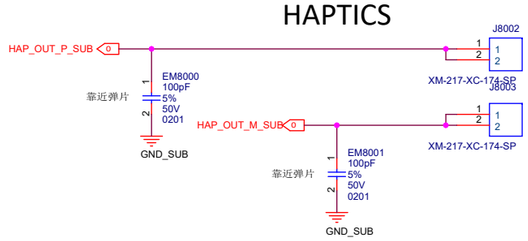

Title <Title>		
Size A2	Document Number <Doc>	Rev
Date: Friday, July 29, 2022	Sheet	

40PIN BTB

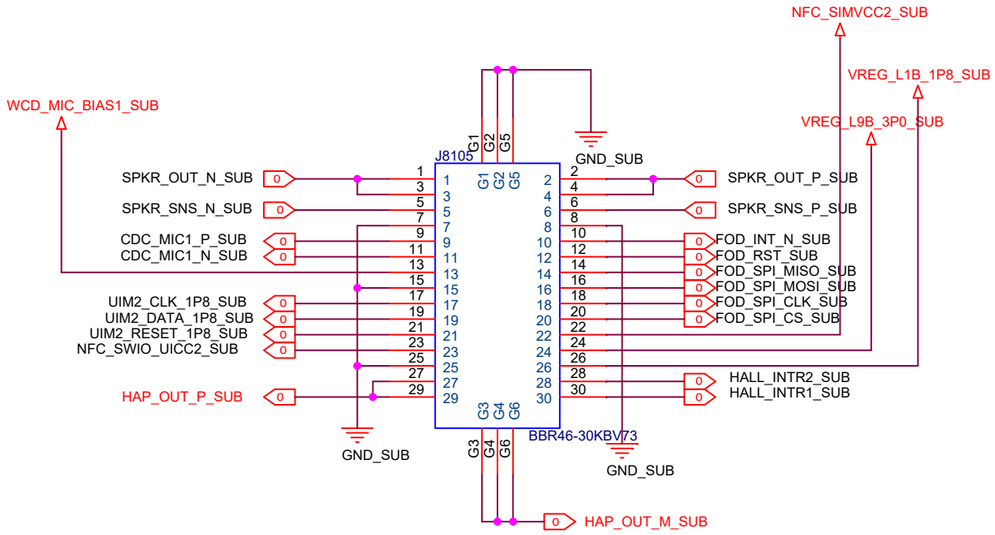

50PIN BTB

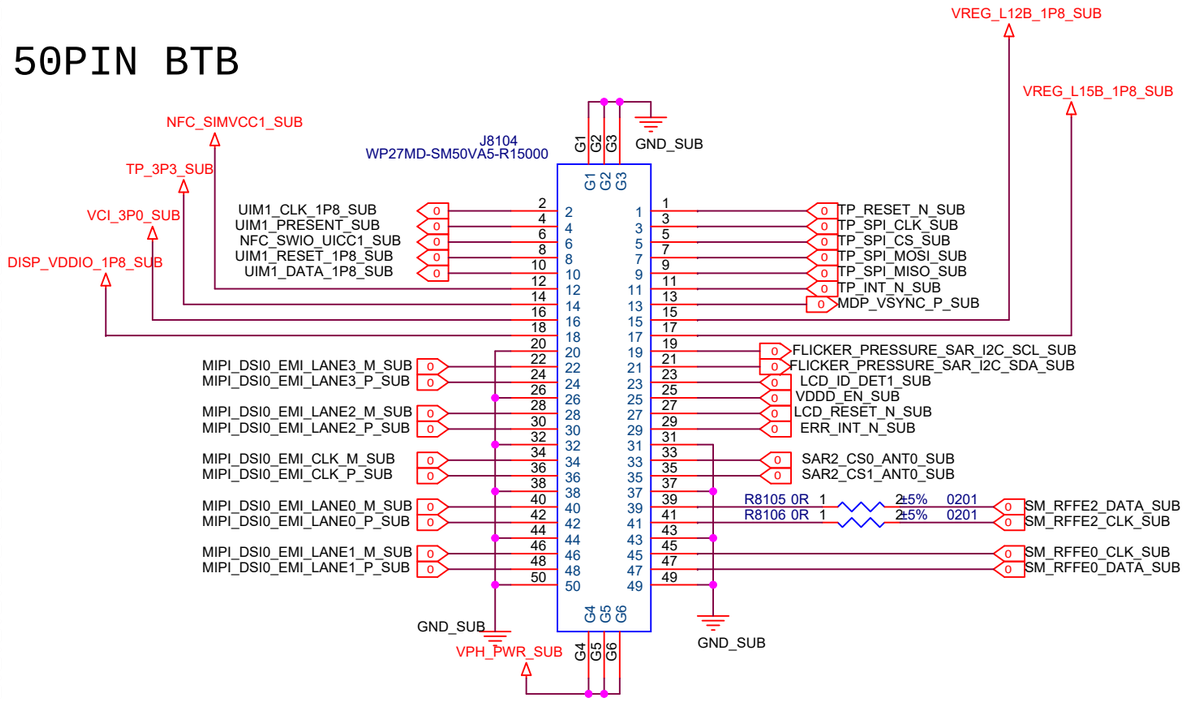

SIM

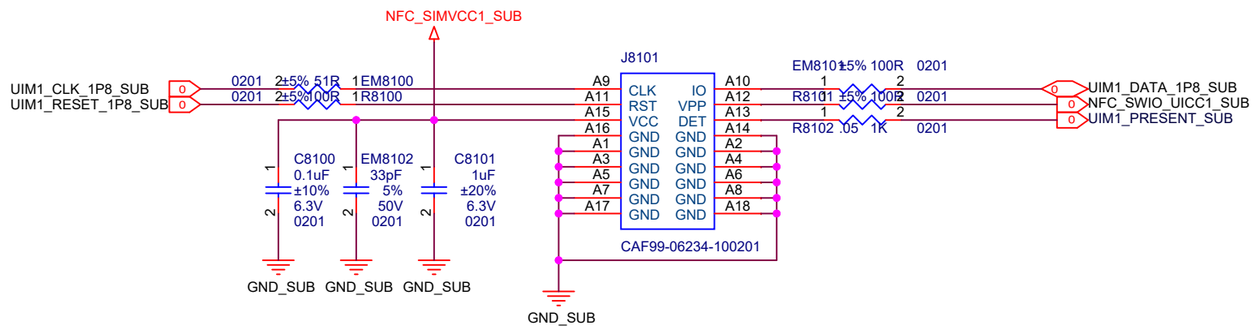

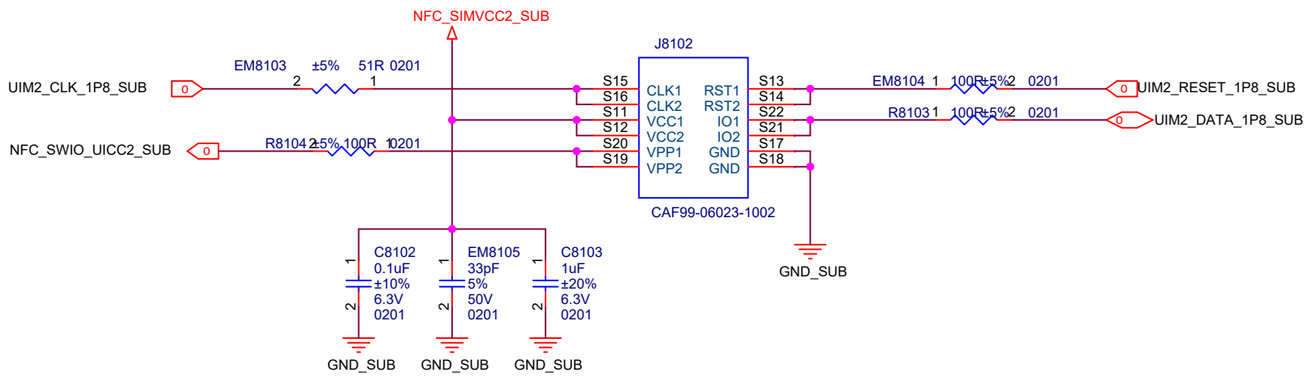

Title	<Title>	
Size A3	Document Number <Doc>	Rev <RevCo
Date: Friday, July 29, 2022	Sheet 5 of 7	

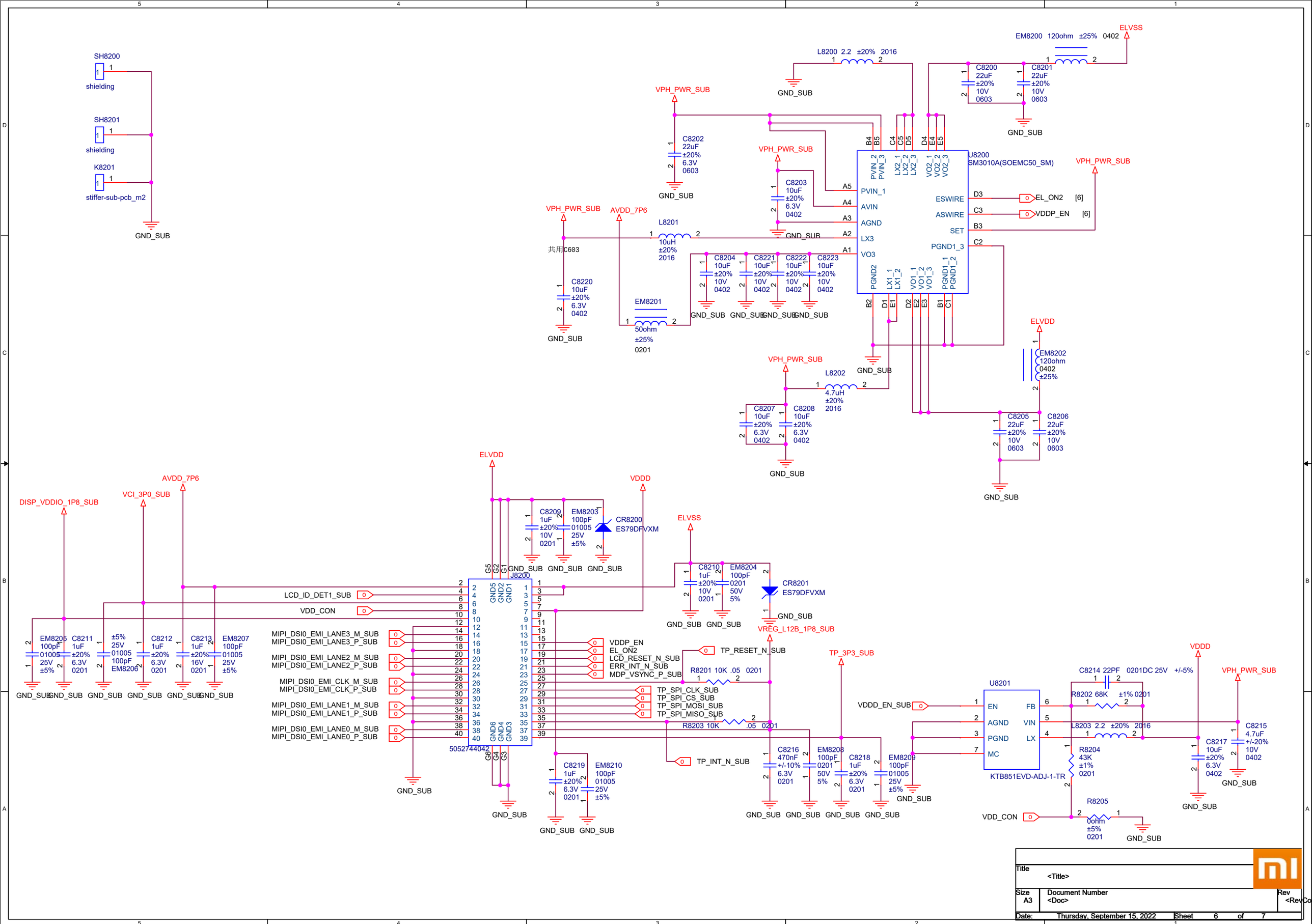
SH8200
shielding
SH8201
shielding
K8201
stiffer-sub-pcb_m2
GND_SUB
L8200 2.2 ±20% 2016
EM8200 120ohm ±25% 0402
ELVSS
C8200 22uF ±20% 10V 0603
C8201 22uF ±20% 10V 0603
VPH_PWR_SUB
C8202 22uF ±20% 6.3V 0603
C8203 10uF ±20% 6.3V 0402
U8200
SM3010A(SOEMC50_SM)
PVIN_1
AVIN
AGND
LX3
VO3
ESWIRE
ASWIRE
SET
PGND1_3
EL_ON2
VDDP_EN
AVDD_7P6
L8201 10uH ±20% 2016
共用C603
C8220 10uF ±20% 6.3V 0402
EM8201 50ohm ±25% 0201
C8204 10uF ±20% 10V 0402
C8221 10uF ±20% 10V 0402
C8222 10uF ±20% 10V 0402
C8223 10uF ±20% 10V 0402
ELVDD
EM8202 120ohm 0402 ±25%
L8202 4.7uH ±20% 2016
C8207 10uF ±20% 6.3V 0402
C8208 10uF ±20% 6.3V 0402
C8205 22uF ±20% 10V 0603
C8206 22uF ±20% 10V 0603
DISP_VDDIO_1P8_SUB
VCI_3P0_SUB
VDDD
C8209 1uF ±20% 10V 0201
EM8203 100pF 01005 25V ±5%
CR8200 ES79DFVXM
C8210 1uF ±20% 10V 0201
EM8204 100pF 0201 50V 5%
CR8201 ES79DFVXM
VREG_L12B_1P8_SUB
J8200
5052744042
LCD_ID_DET1_SUB
VDD_CON
MIPI_DSI0_EMI_LANE3_M_SUB
MIPI_DSI0_EMI_LANE3_P_SUB
MIPI_DSI0_EMI_LANE2_M_SUB
MIPI_DSI0_EMI_LANE2_P_SUB
MIPI_DSI0_EMI_CLK_M_SUB
MIPI_DSI0_EMI_CLK_P_SUB
MIPI_DSI0_EMI_LANE1_M_SUB
MIPI_DSI0_EMI_LANE1_P_SUB
MIPI_DSI0_EMI_LANE0_M_SUB
MIPI_DSI0_EMI_LANE0_P_SUB
VDDP_EN
EL_ON2
LCD_RESET_N_SUB
ERR_INT_N_SUB
MDP_VSYNC_P_SUB
TP_SPI_CLK_SUB
TP_SPI_CS_SUB
TP_SPI_MOSI_SUB
TP_SPI_MISO_SUB
TP_RESET_N_SUB
TP_INT_N_SUB
R8201 10K .05 0201
R8203 10K .05 0201
TP_3P3_SUB
VDDD_EN_SUB
U8201
KTB851EVD-ADJ-1-TR
C8214 22PF 0201DC 25V +/-5%
R8202 68K ±1% 0201
L8203 2.2 ±20% 2016
R8204 43K ±1% 0201
R8205 0ohm ±5% 0201
C8215 4.7uF +/-20% 10V 0402
C8217 10uF ±20% 6.3V 0402
Title
<Title>
Size A3
Document Number
<Doc>
Rev
Date: Thursday, September 15, 2022
Sheet 6 of 7

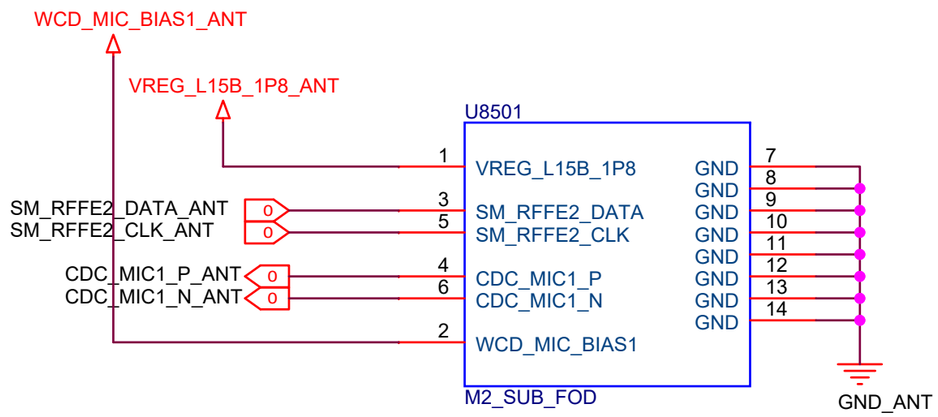

Title	M2_MAIN	
Size A4	Document Number ANT1	Rev
Date: Friday, September 02, 2022	Sheet 07	

FOD_LGA

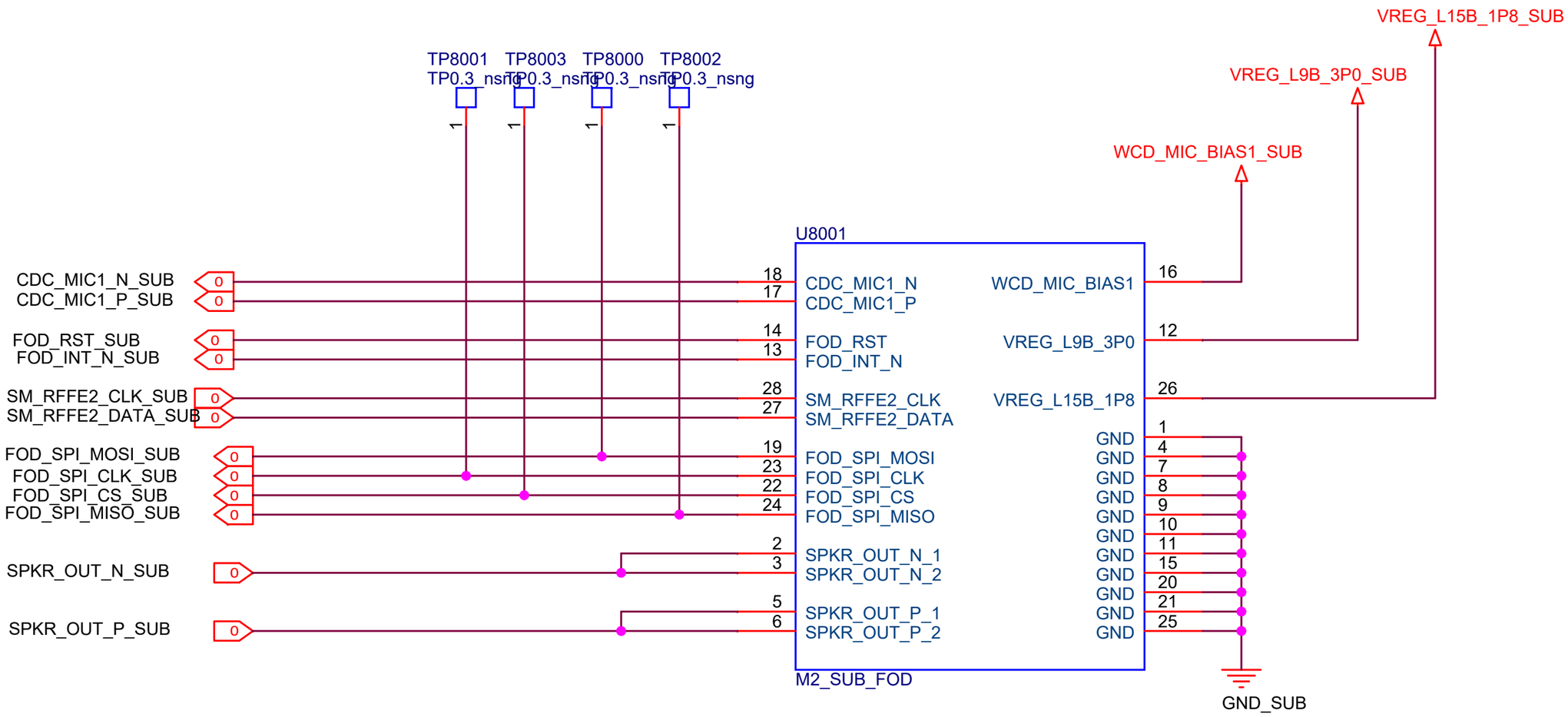

Title	M2_MAIN	
Size A	Document Number ANT1	Rev
Date: Friday, September 16, 2022	Sheet 07 of 76	

QET7100_1

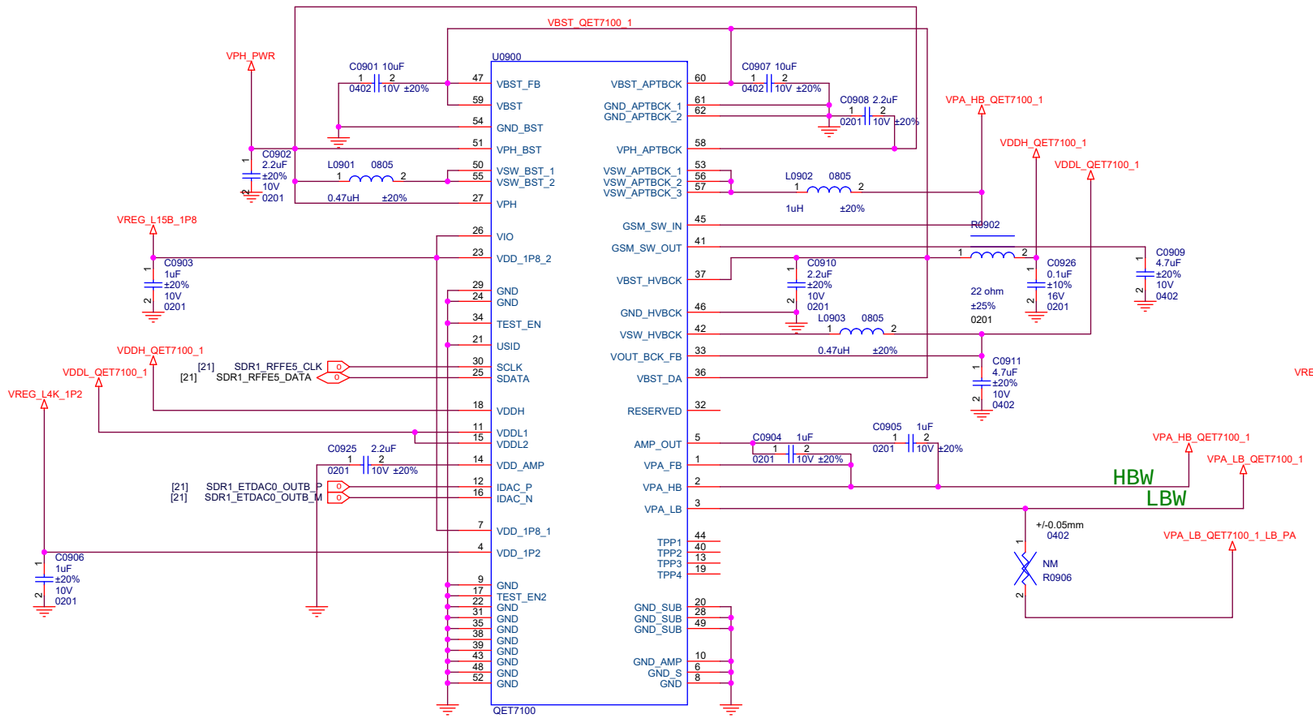

QET7100_2

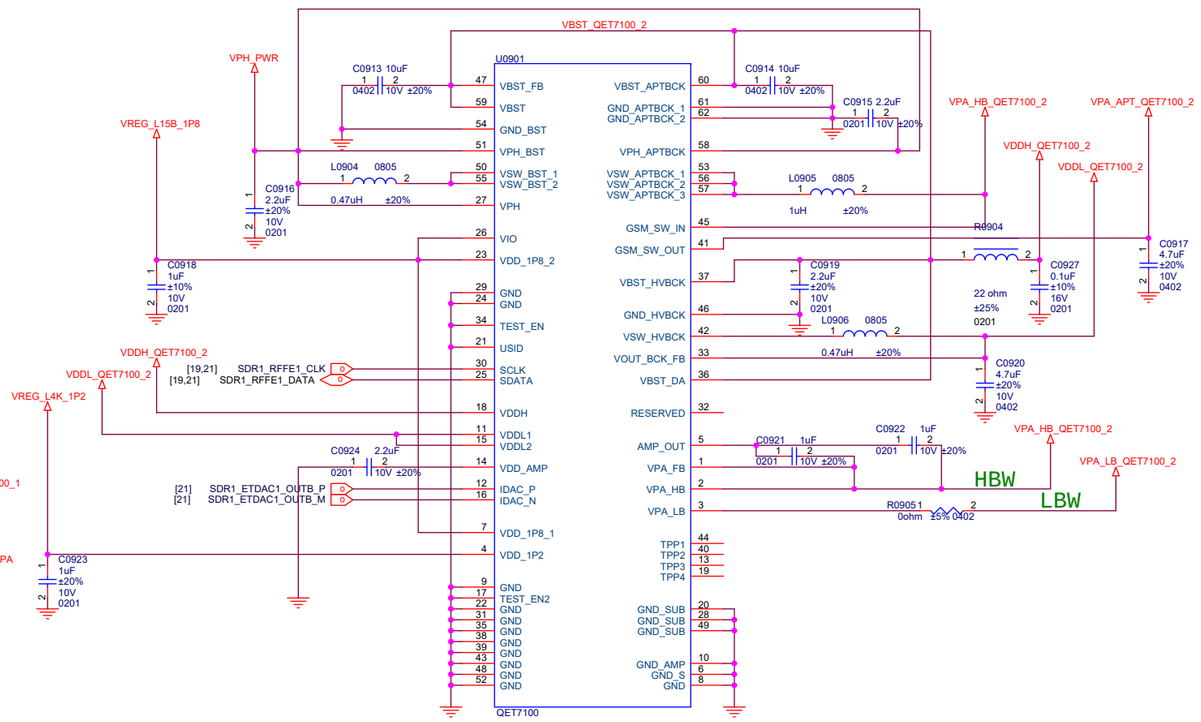

Title	M2_MAIN	
Size A2	Document Number RF DC-DC	Rev
Date: Friday, July 29, 2022	Sheet 09	76

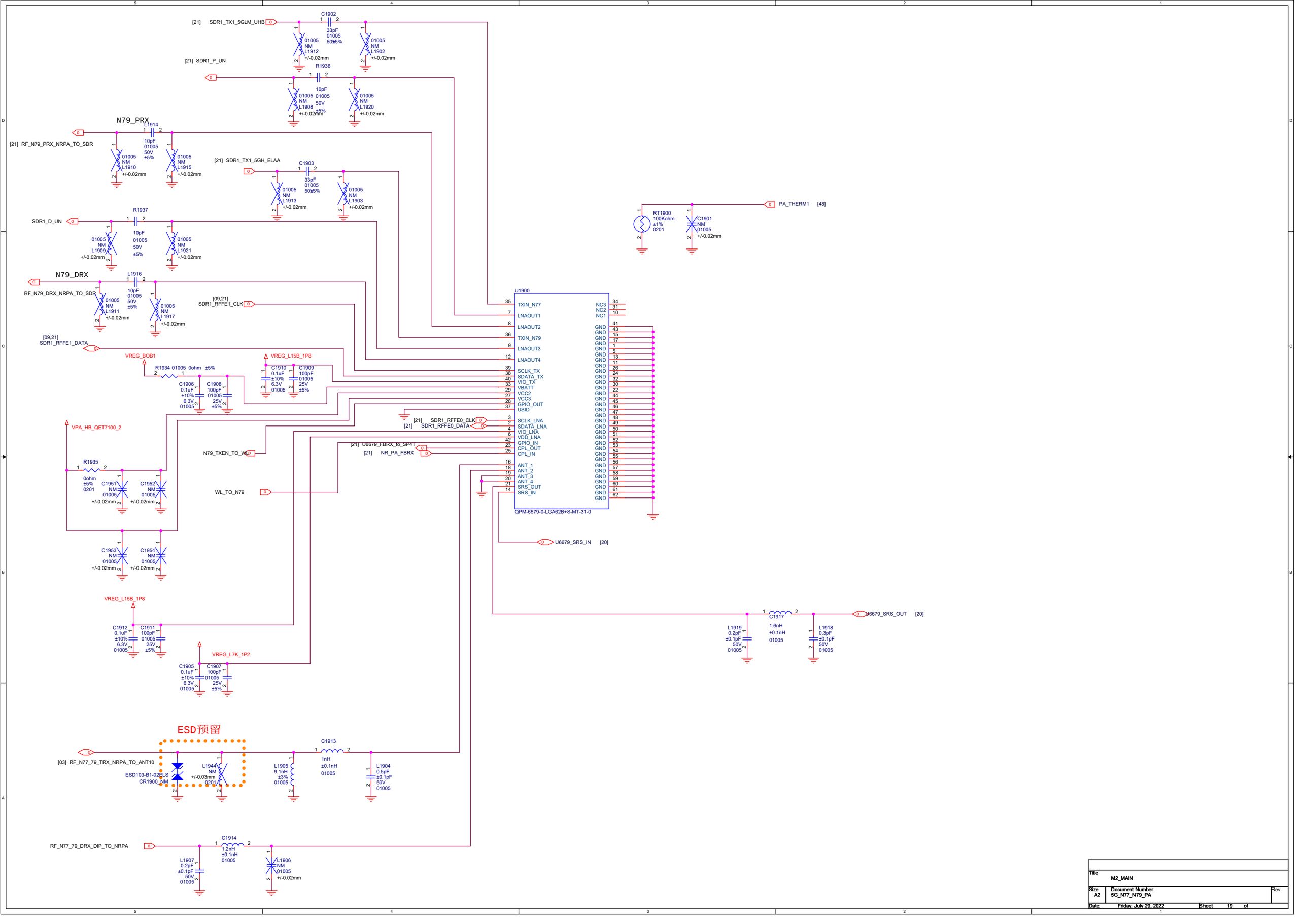

Title	M2_MAIN	
Size A2	Document Number 5G_N77_N79_PA	Rev
Date: Friday, July 29, 2022	Sheet 19 of	

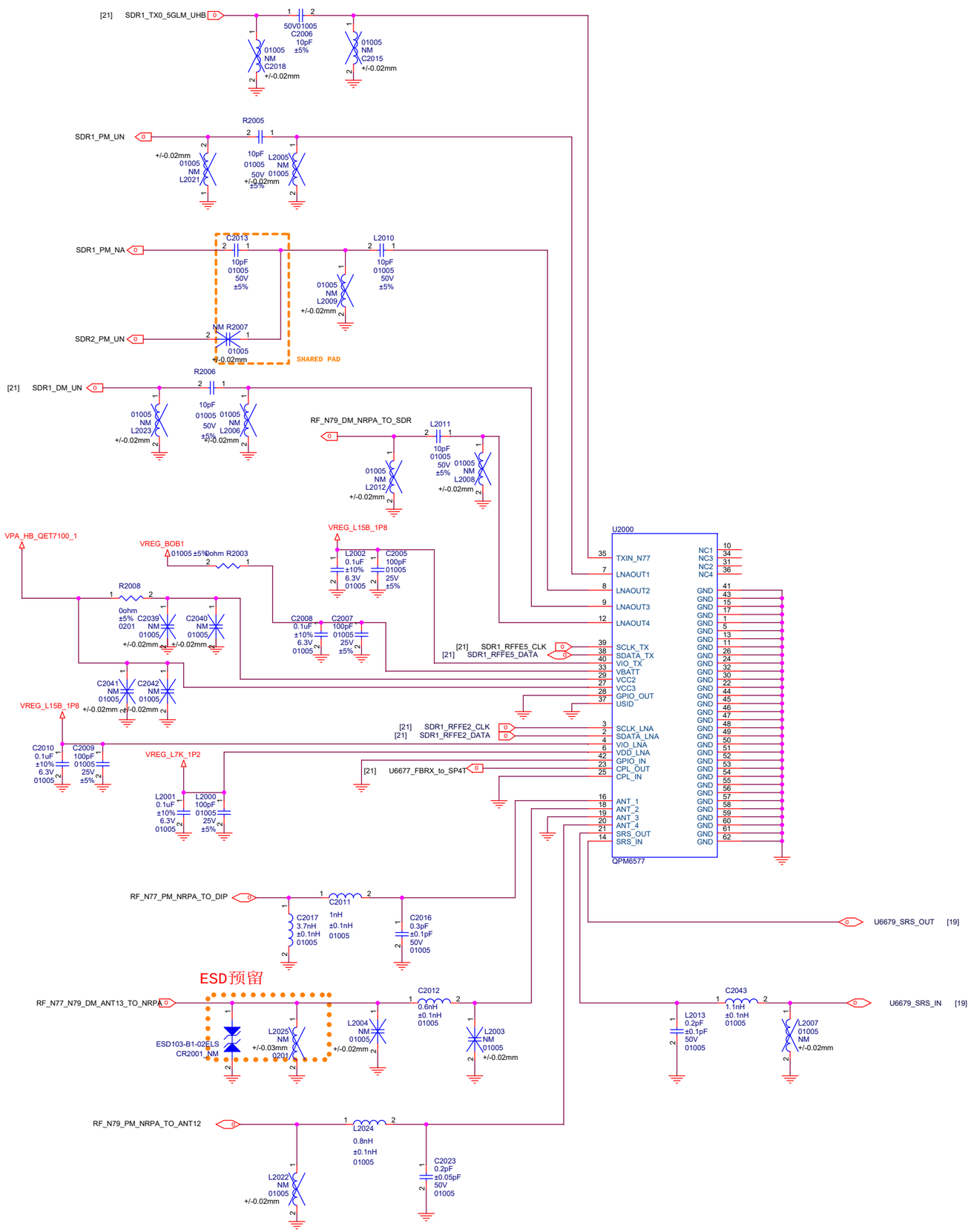

Title	M2_MAIN	
Size A2	Document Number 5G N77 N79 MIMO	Rev
Date: Friday, July 29, 2022	Sheet 20 of	

735D

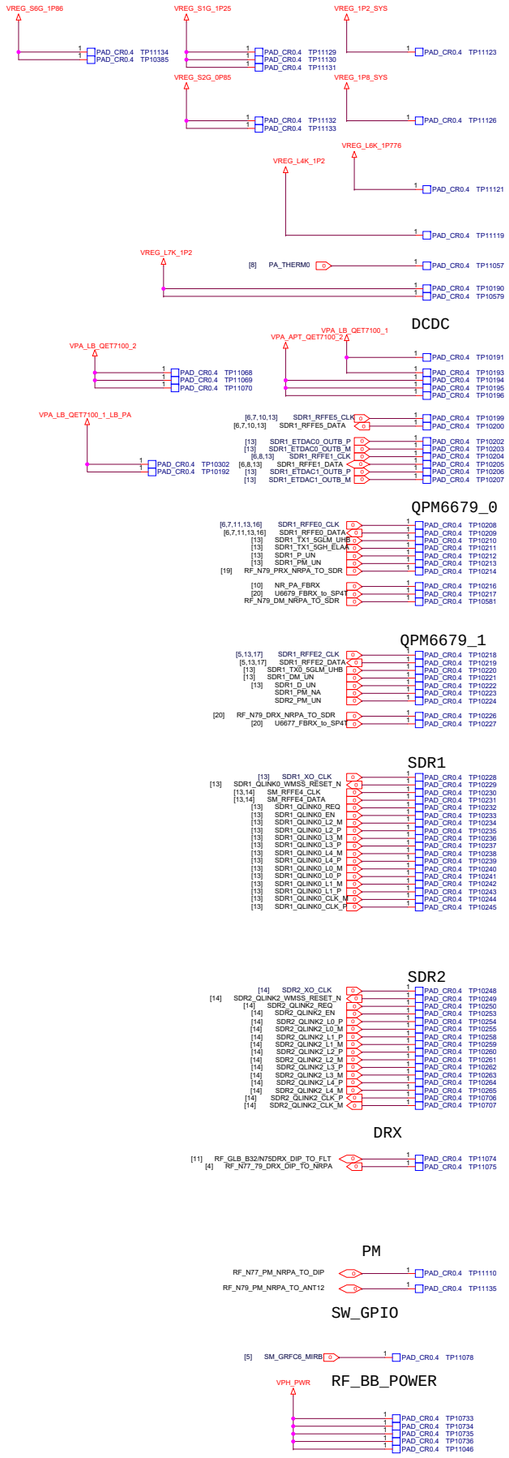

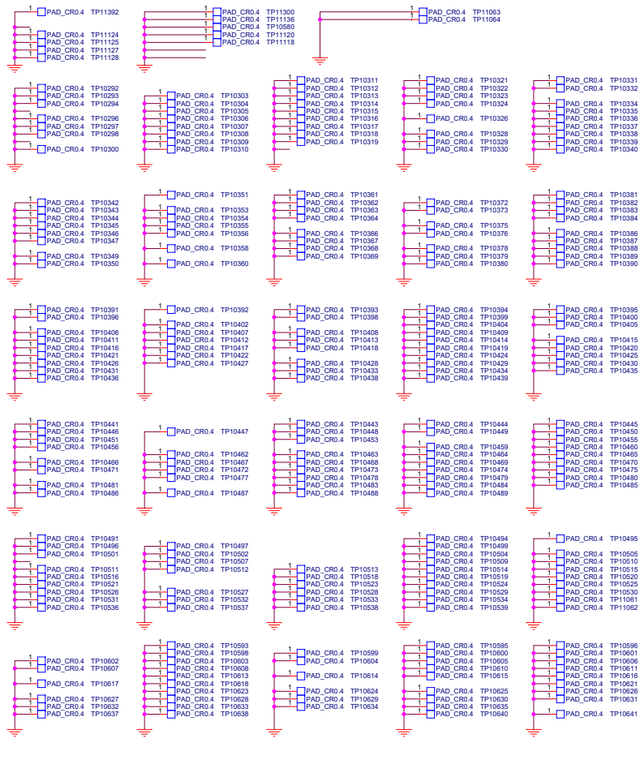

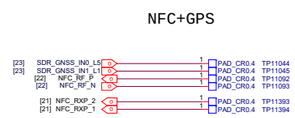

Title	L2_MAIN	
Size A1	Document Number 4G FRONT END	Rev
Date: Friday, July 29, 2022	Sheet	

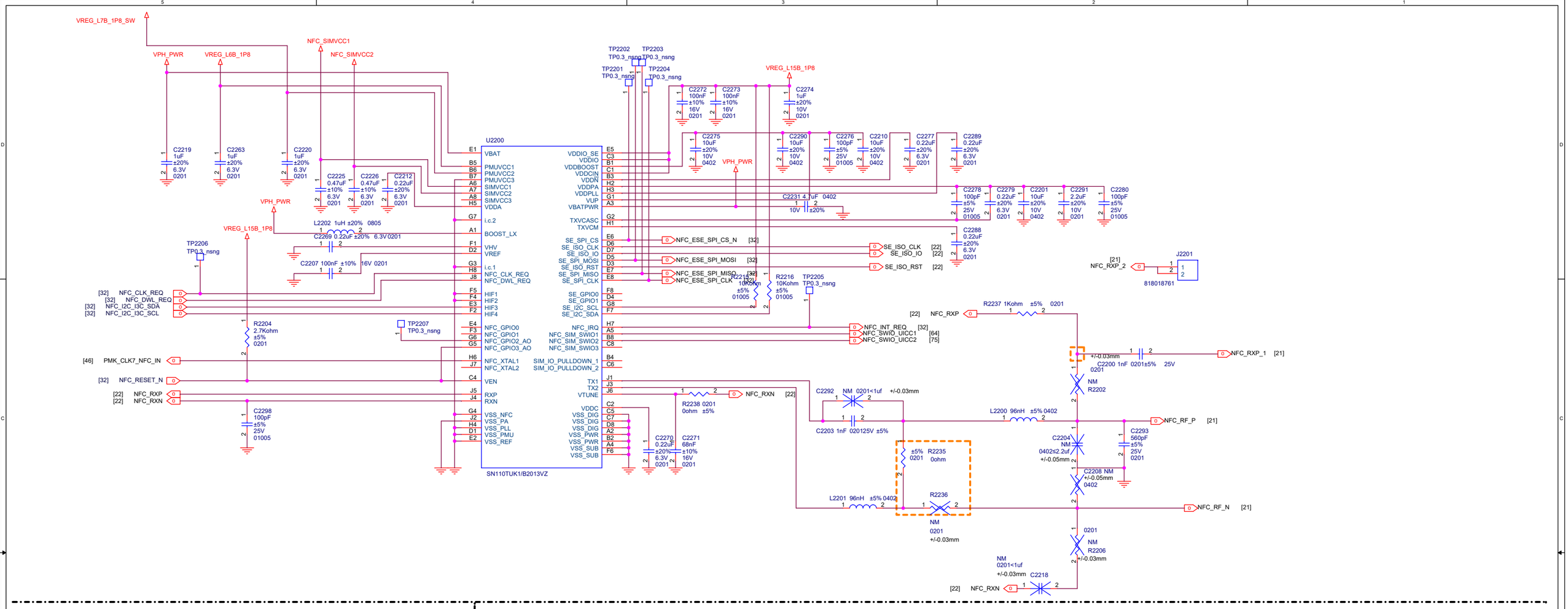

Title	M2_MAIN
Size A2	Document Number NFC
Rev	
Date: Friday, September 16, 2022	Sheet 22

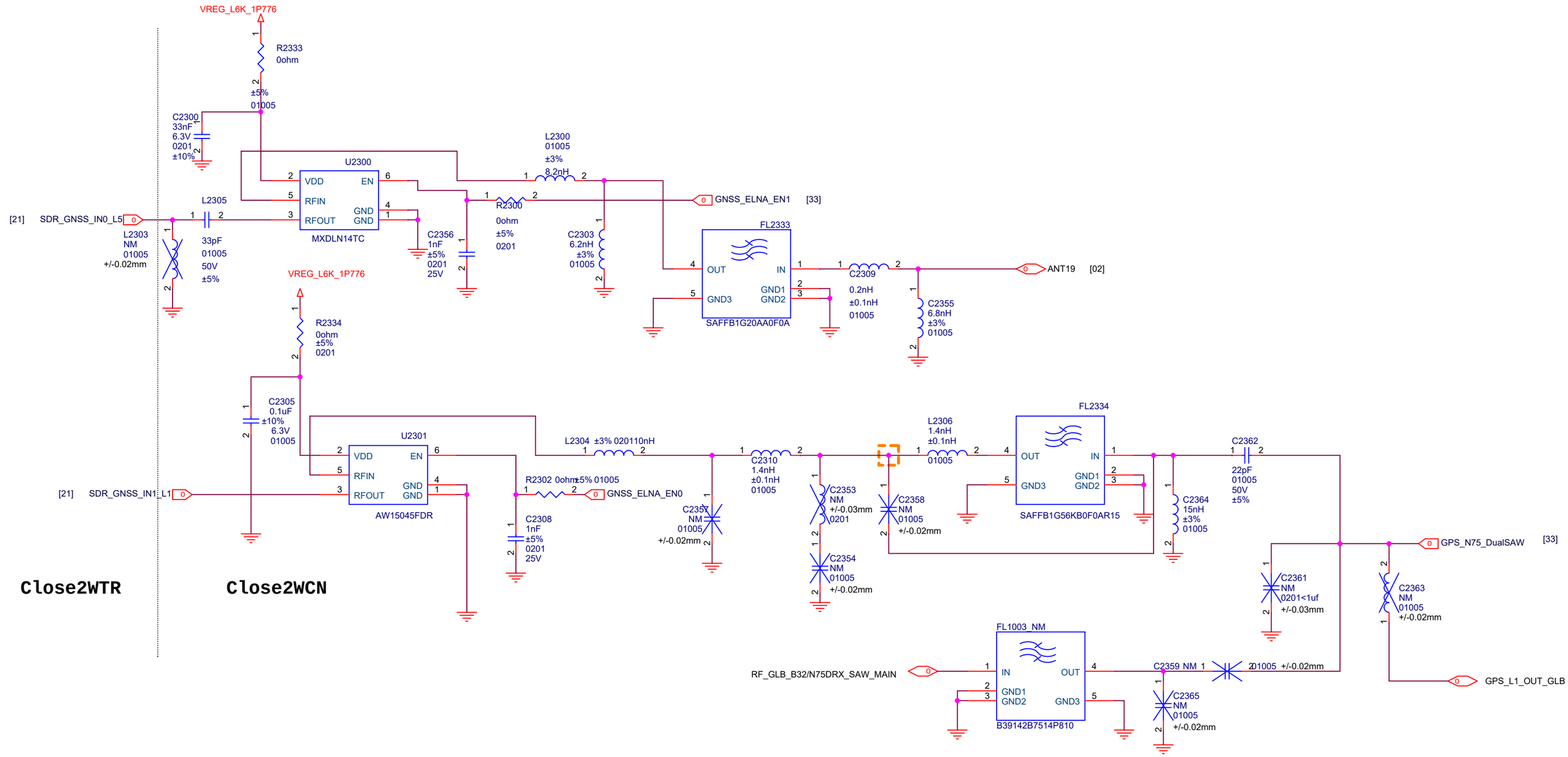

Title	M2_MAIN	
Size A3	Document Number GPS	Rev
Date: Friday, July 29, 2022	Sheet 23 of 76	

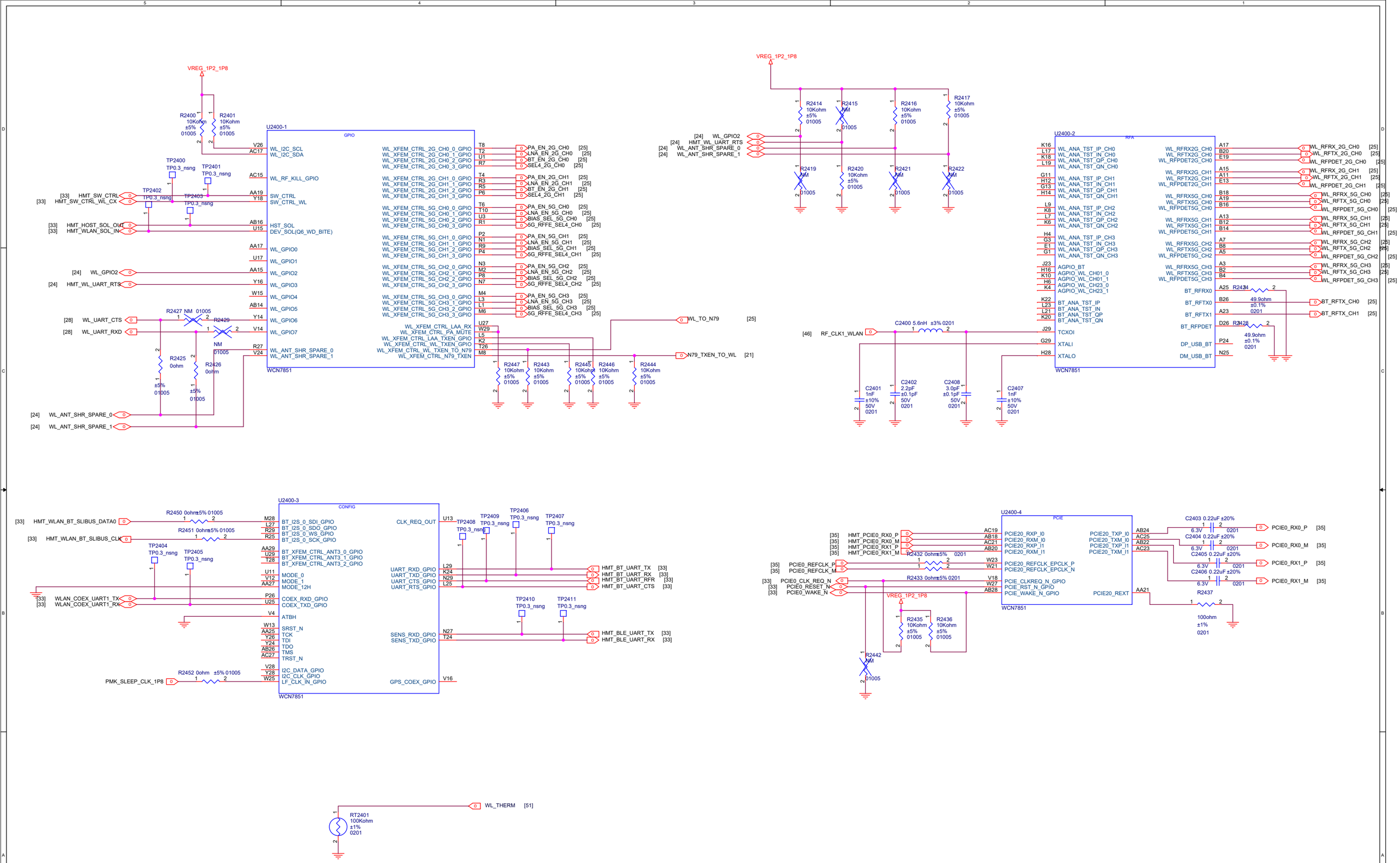

Title	M2_MAIN
Size A2	Document Number WIFI Interface
Rev	
Date: Friday, September 16, 2022	Sheet

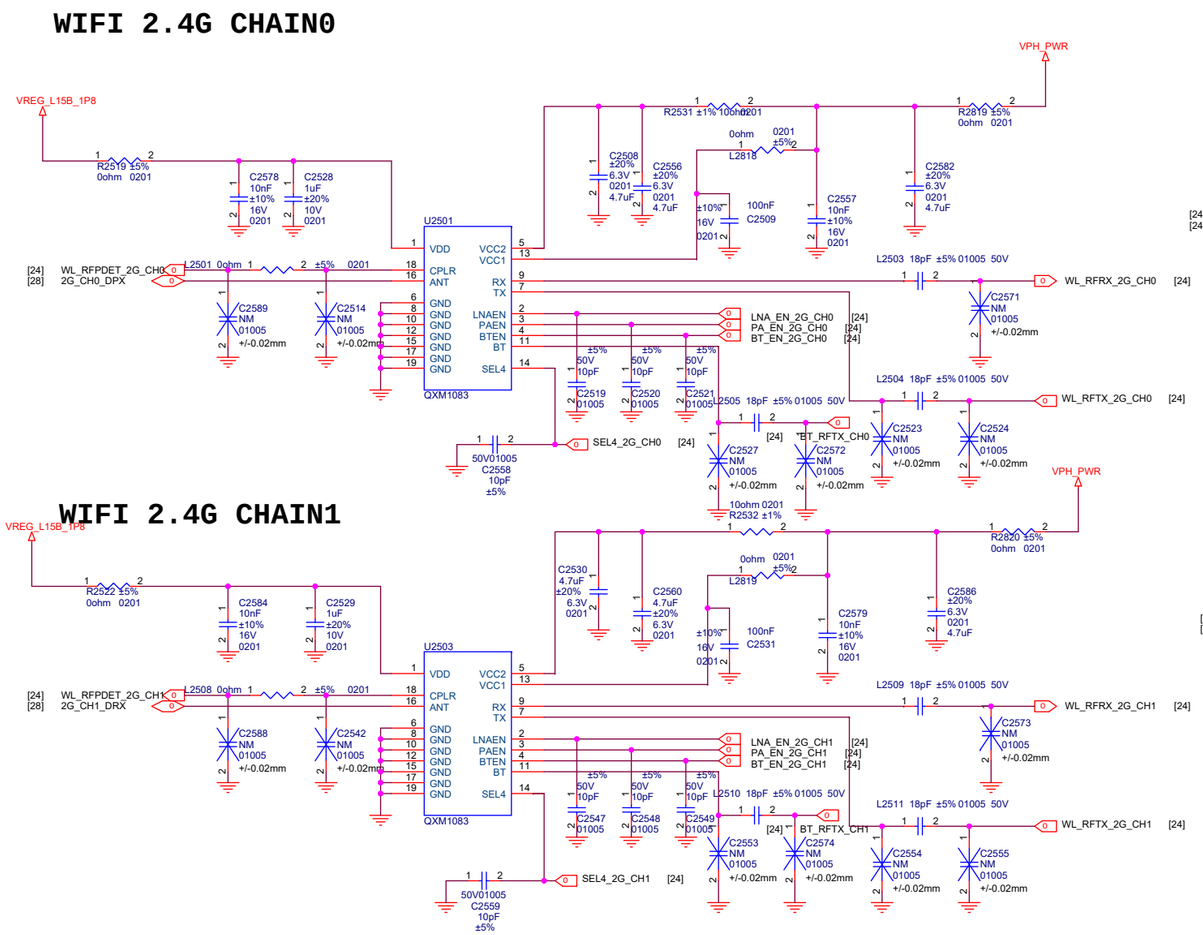

Title	L2_MAIN
Size A2	Document Number SM8450 EVB
Rev	
Date: Friday, July 29, 2022	Sheet 25

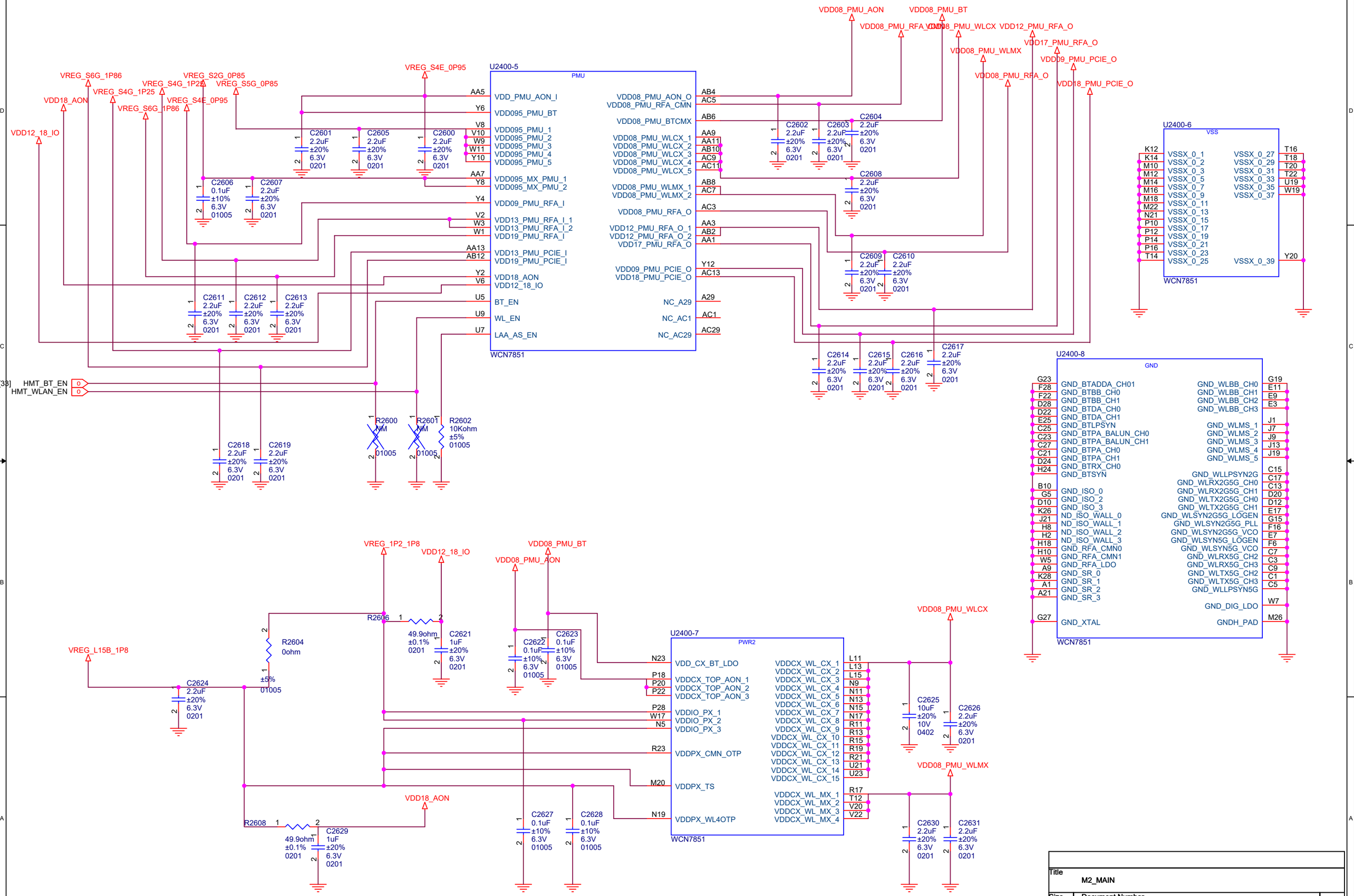

Title	M2_MAIN
Size A3	Document Number ANT1
Date: Friday, July 29, 2022	Sheet 26

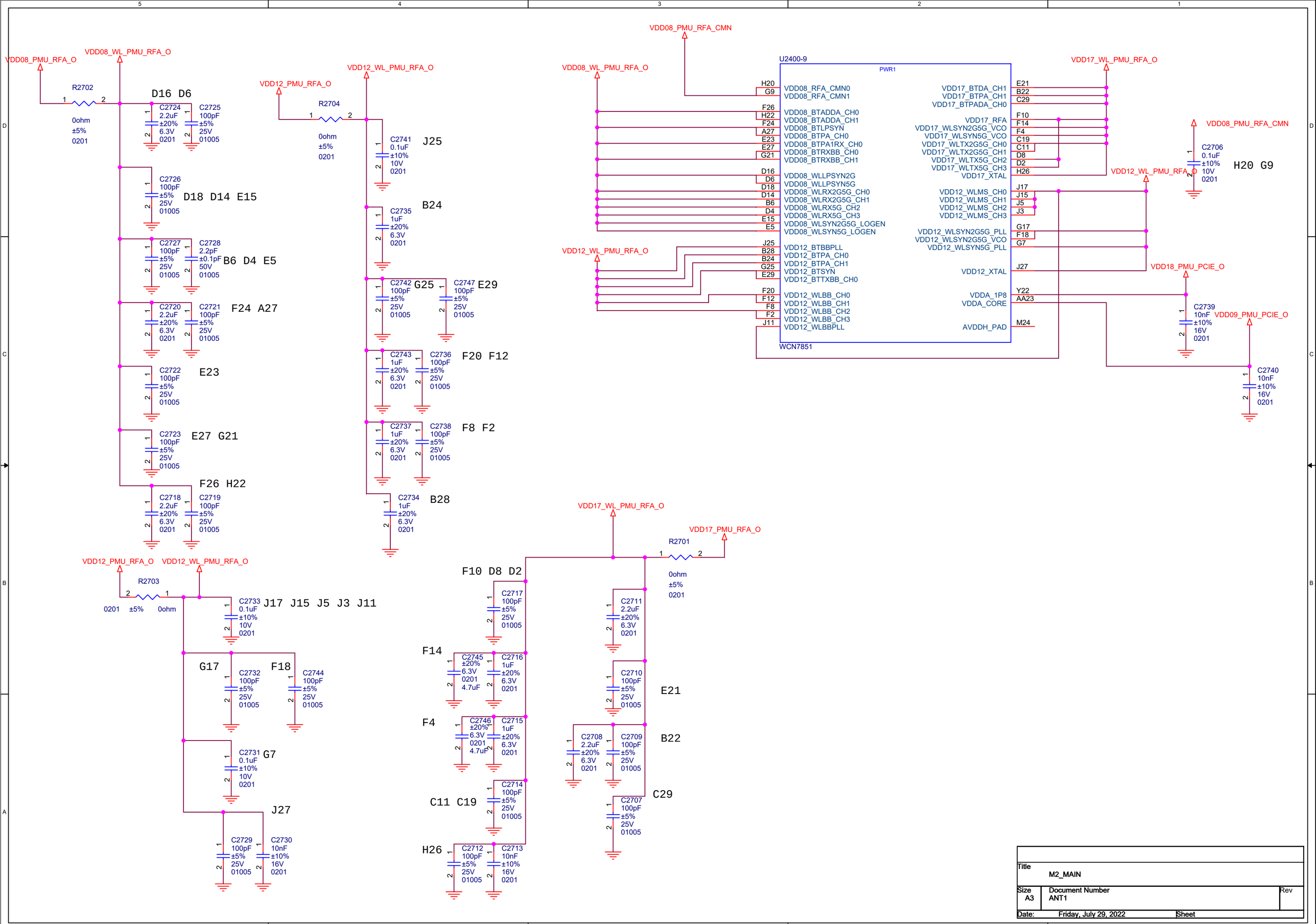

Title	M2_MAIN	
Size A3	Document Number ANT1	Rev
Date: Friday, July 29, 2022	Sheet	

WIFI 5G CHAIN 1+WIFI 5G CHAIN 3

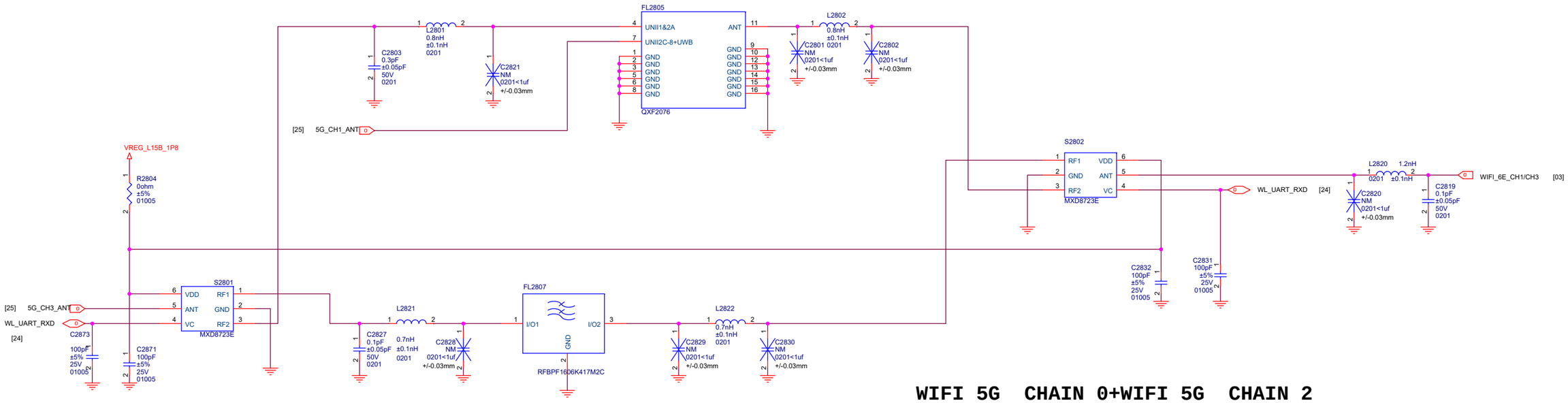

WIFI 5G CHAIN 0+WIFI 5G CHAIN 2

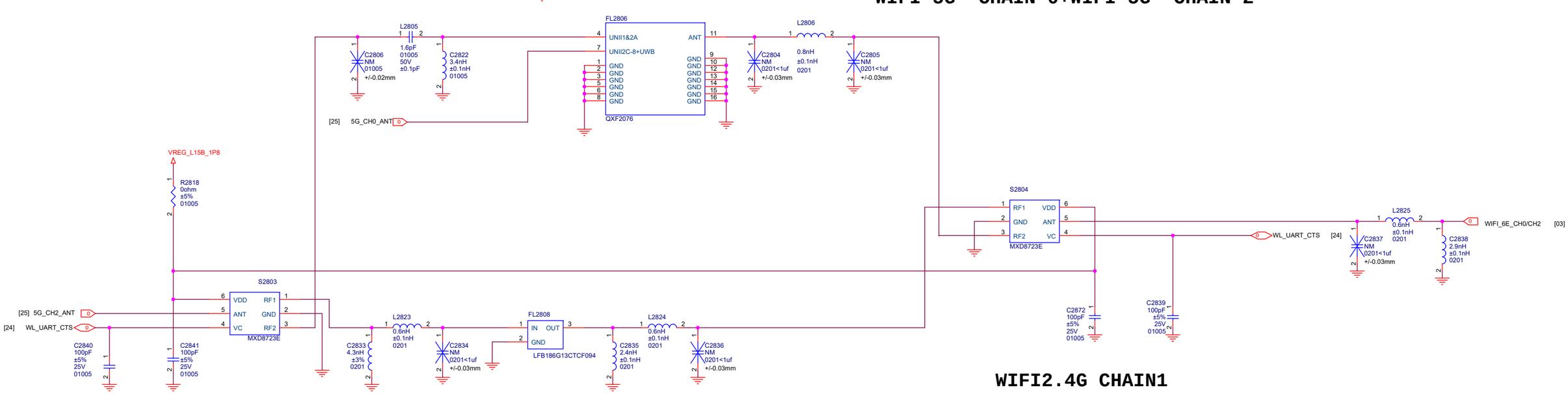

WIFI2.4G CHAIN1

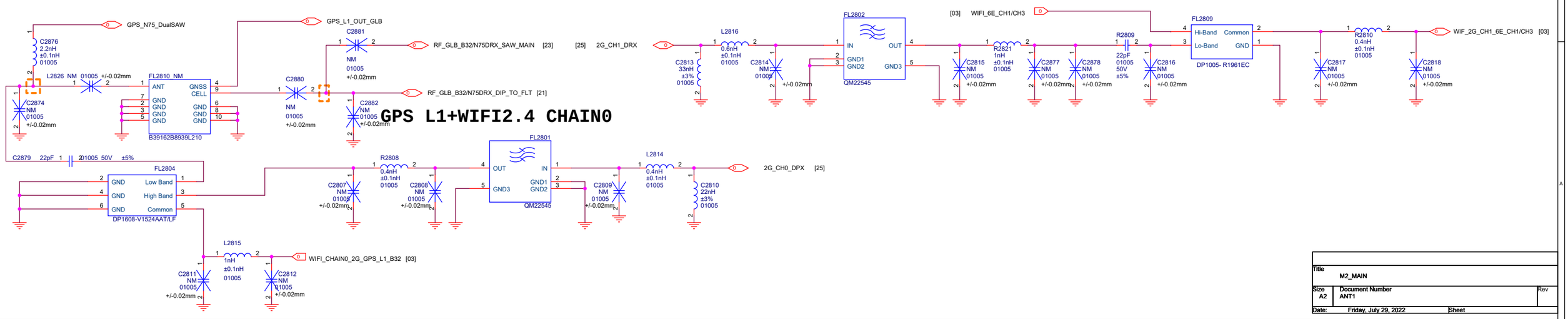

GPS L1+WIFI2.4 CHAIN0

Title	M2_MAIN		
Size A2	Document Number ANT1		Rev
Date: Friday, July 29, 2022		Sheet	

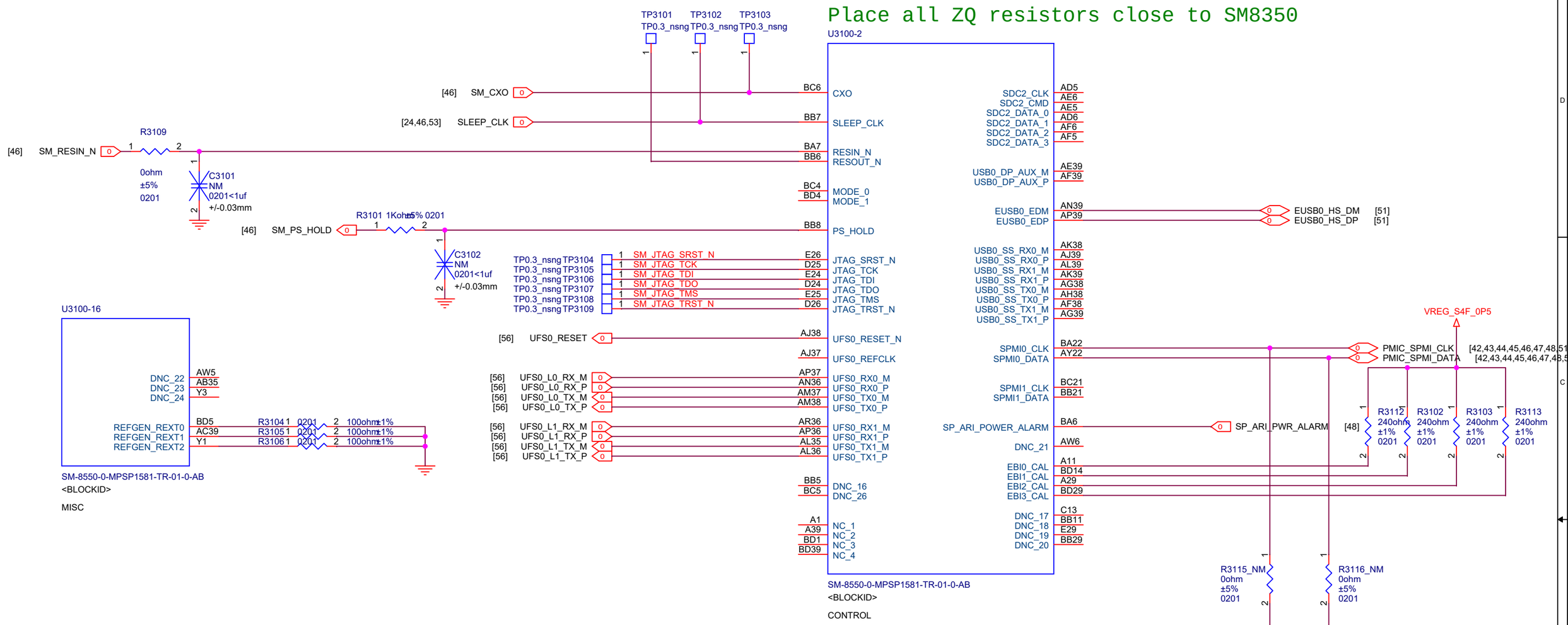

MSM skin temperature thermistor

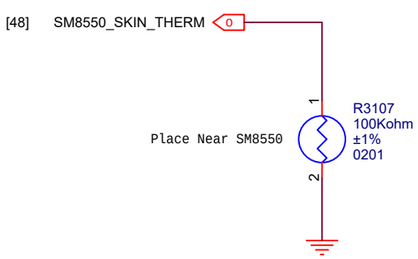

Quiet thermistor Place on a cool place

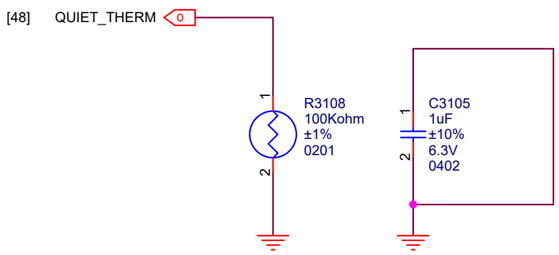

Title	L2_MAIN	
Size A3	Document Number SM8450 EVB	Rev P0
Date: Friday, September 16, 2022	Sheet 31 of 79	

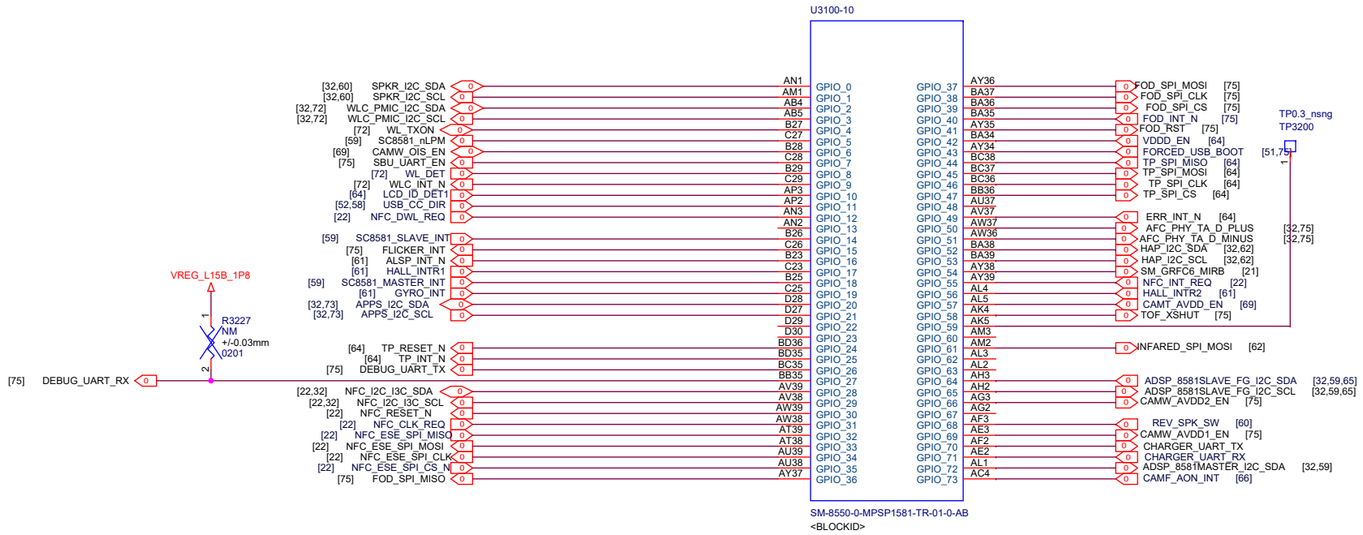

I2C for MAG Sensor

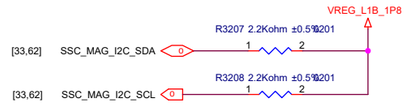

APPS Processor I2C

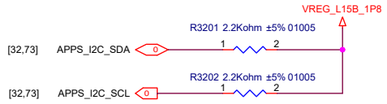

ADSP I2C

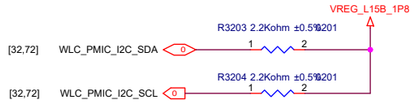

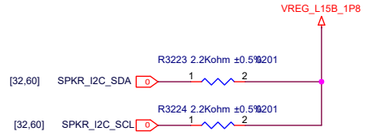

HAP

Camera I2C0

NFC I2C

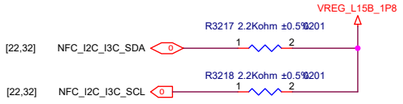

ADSP I2C

FLICKER I2C

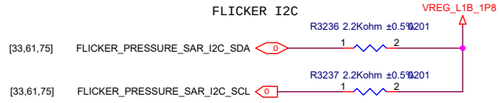

Camera I2C1

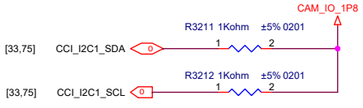

ALS_TOF

Camera I2C2

Camera I2C3

Title: L2_MAIN		
Size: A2	Document Number: SM8450 GPIO-1	Rev
Date: Friday, September 16, 2022	Sheet	

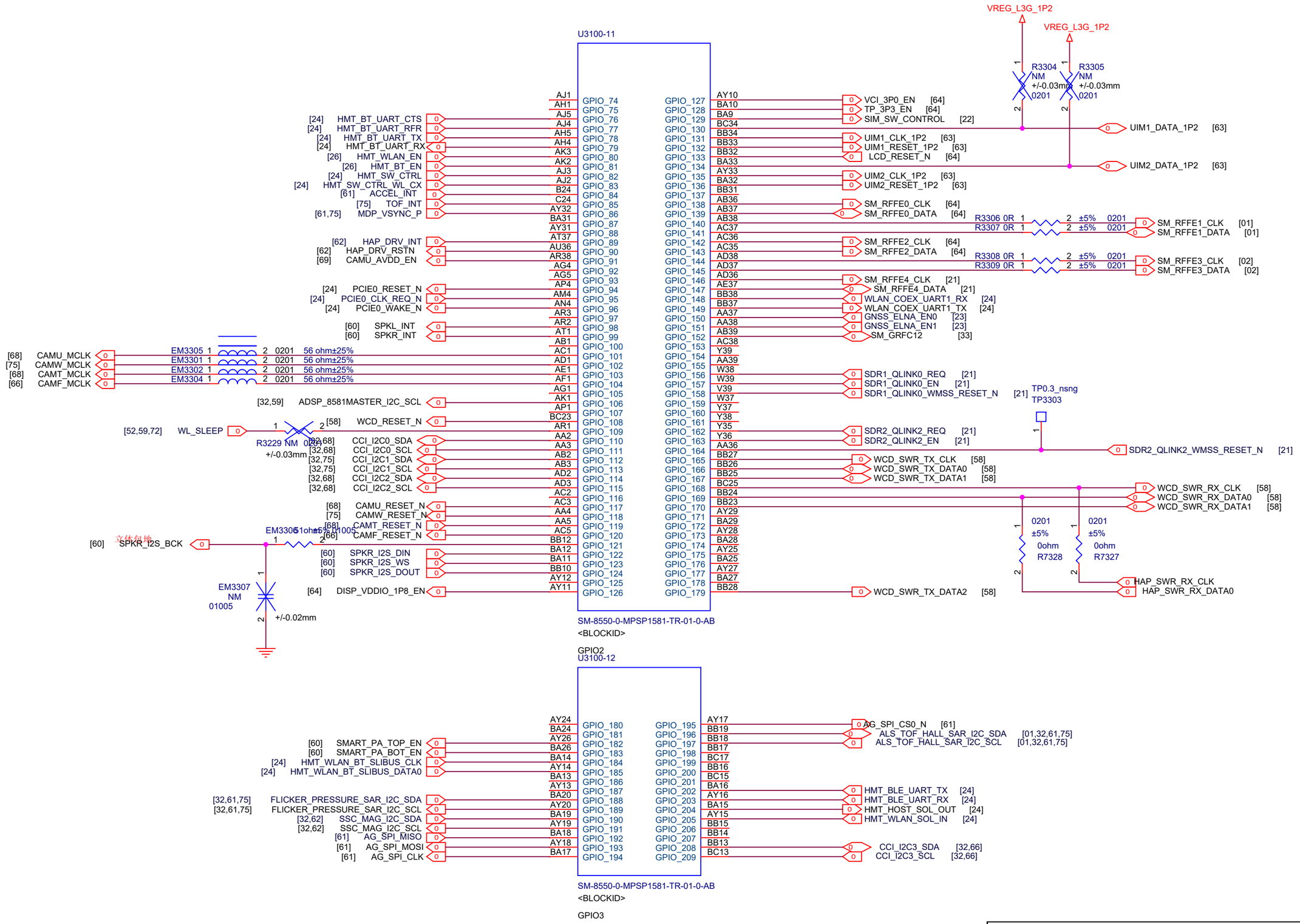

Title	L2_MAIN
Size A3	Document Number SM8450 GPIO-2
Rev	
Date: Friday, September 16, 2022	Sheet

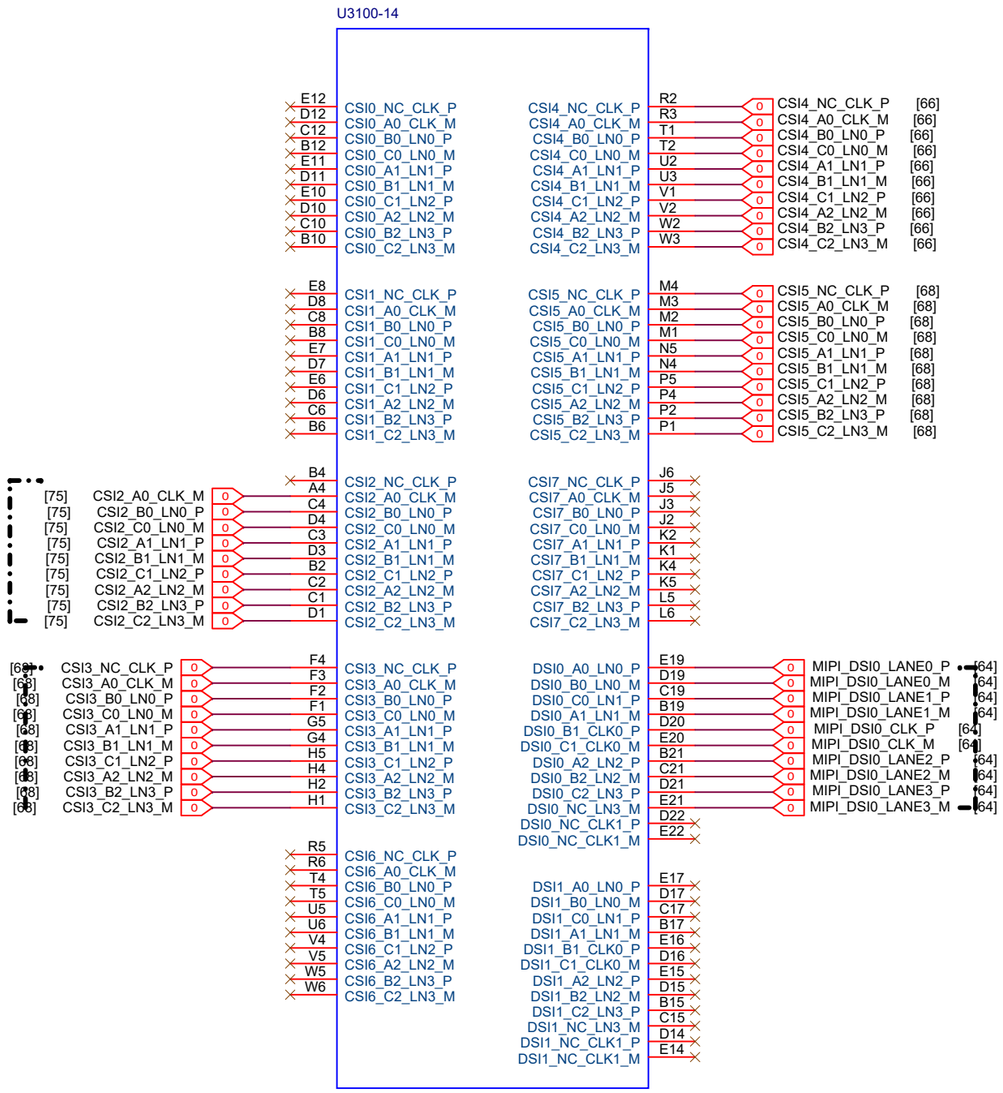

Title	L2_MAIN	
Size A3	Document Number SM8450 MIPI	Rev
Date: Thursday, May 19, 2022	Sheet 34	

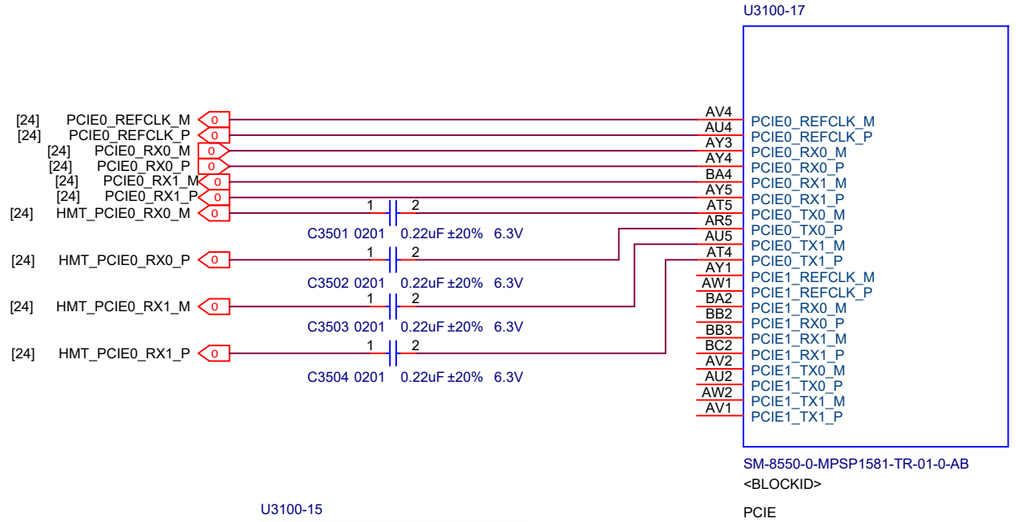

QLINK1 for mmW

Title	L2_MAIN	
Size A3	Document Number SM8450 RF MIPI	Rev
Date: Thursday, May 19, 2022	Sheet 35 of 79	

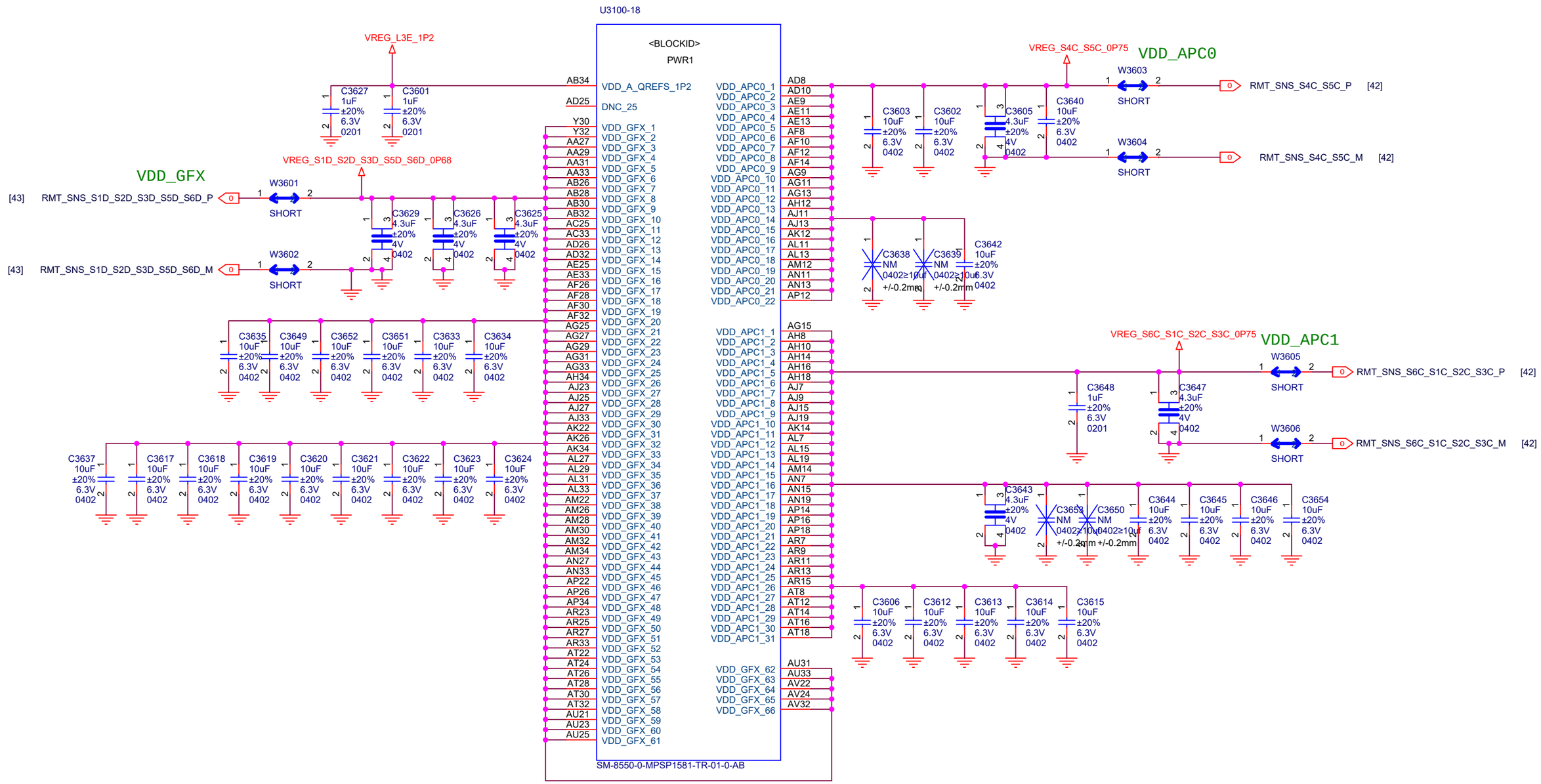

Title	L2_MAIN	
Size A3	Document Number SM8450 EVB	Rev
Date: Friday, July 29, 2022	Sheet 36	

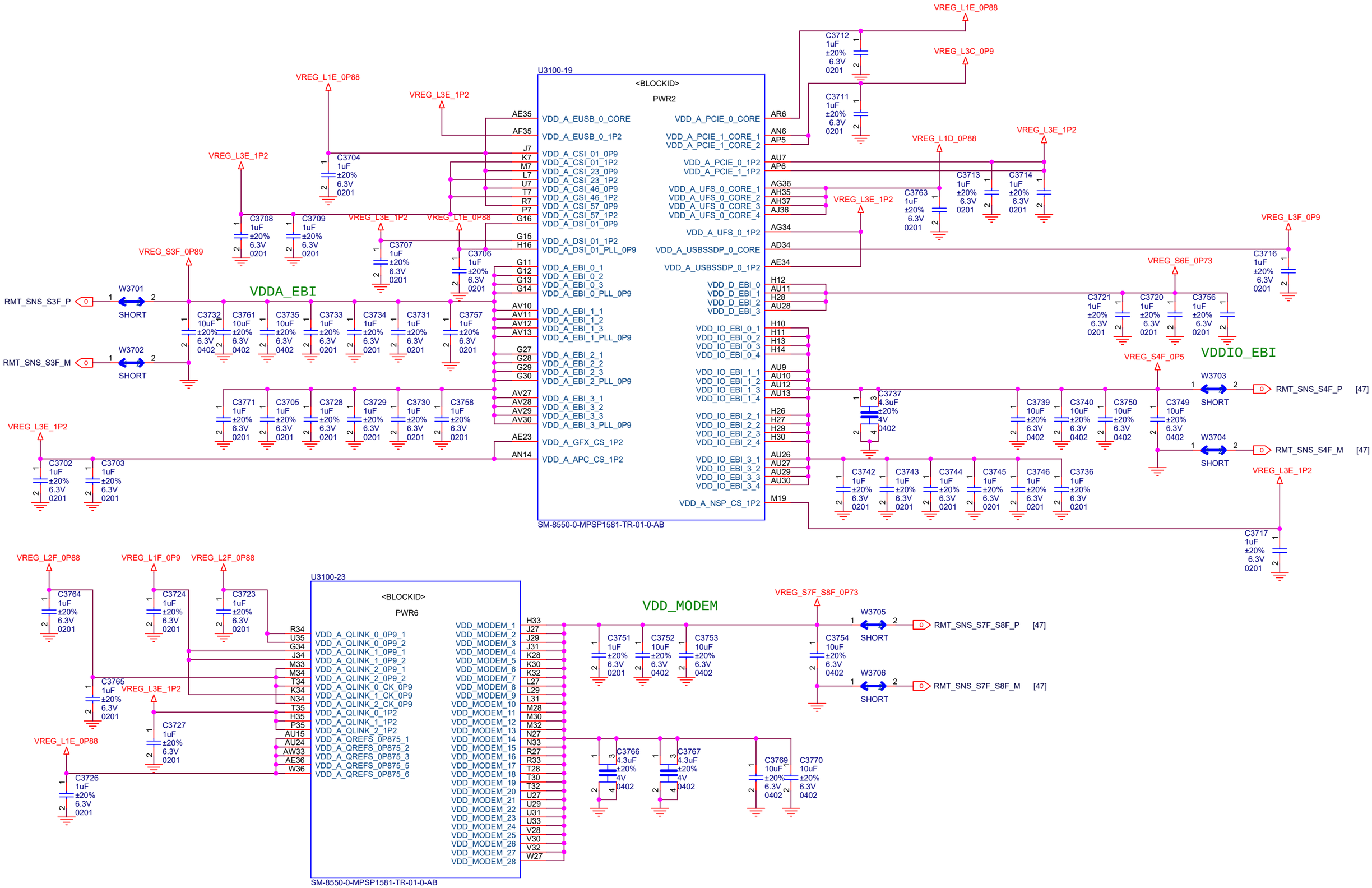

Title	L2_MAIN
Size A3	Document Number SM8450 EVB
Rev	
Date: Friday, July 29, 2022	Sheet

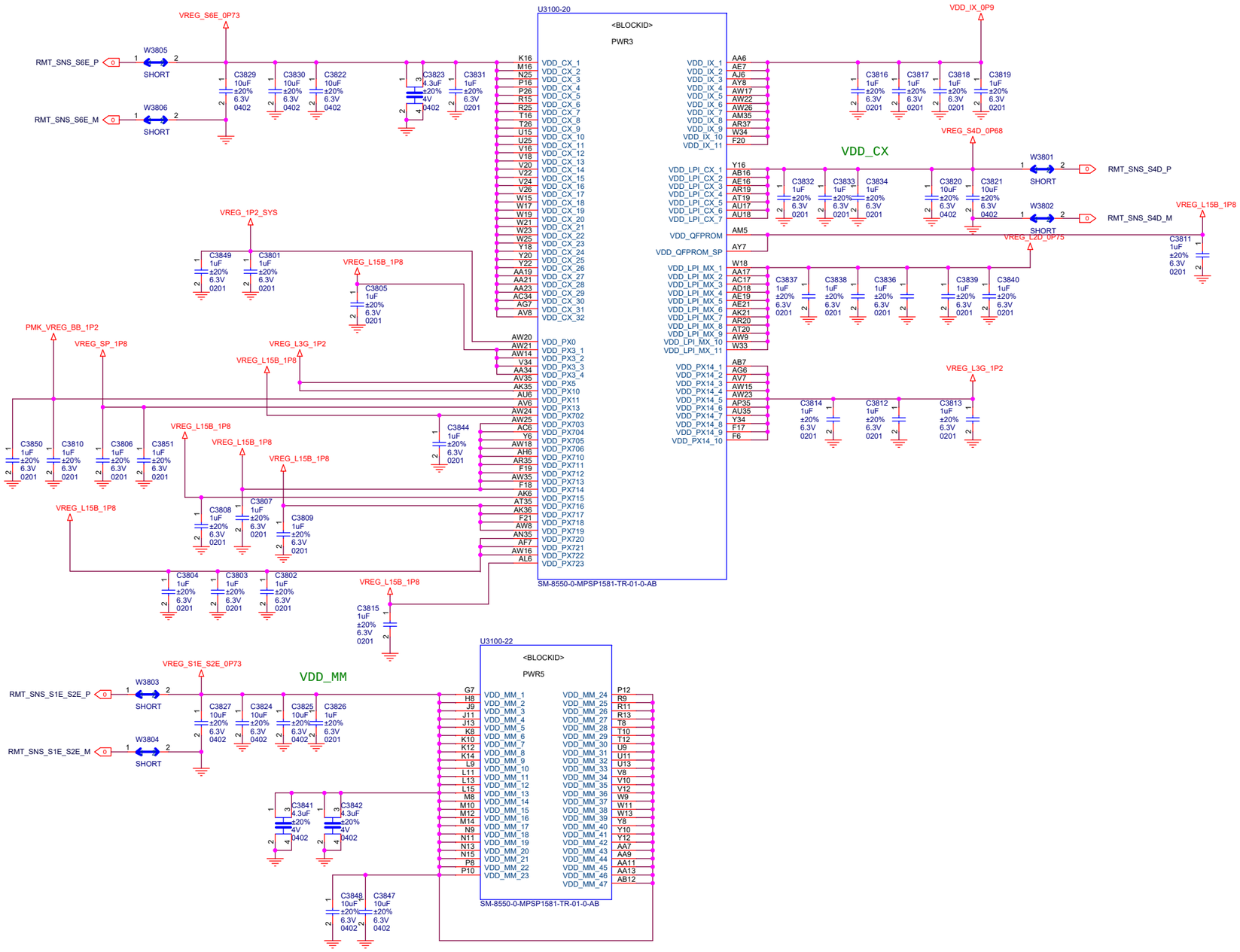

Title	L2_MAIN	
Size A2	Document Number SM8450 EVB	Rev
Date: Friday, July 29, 2022	Sheet 38	

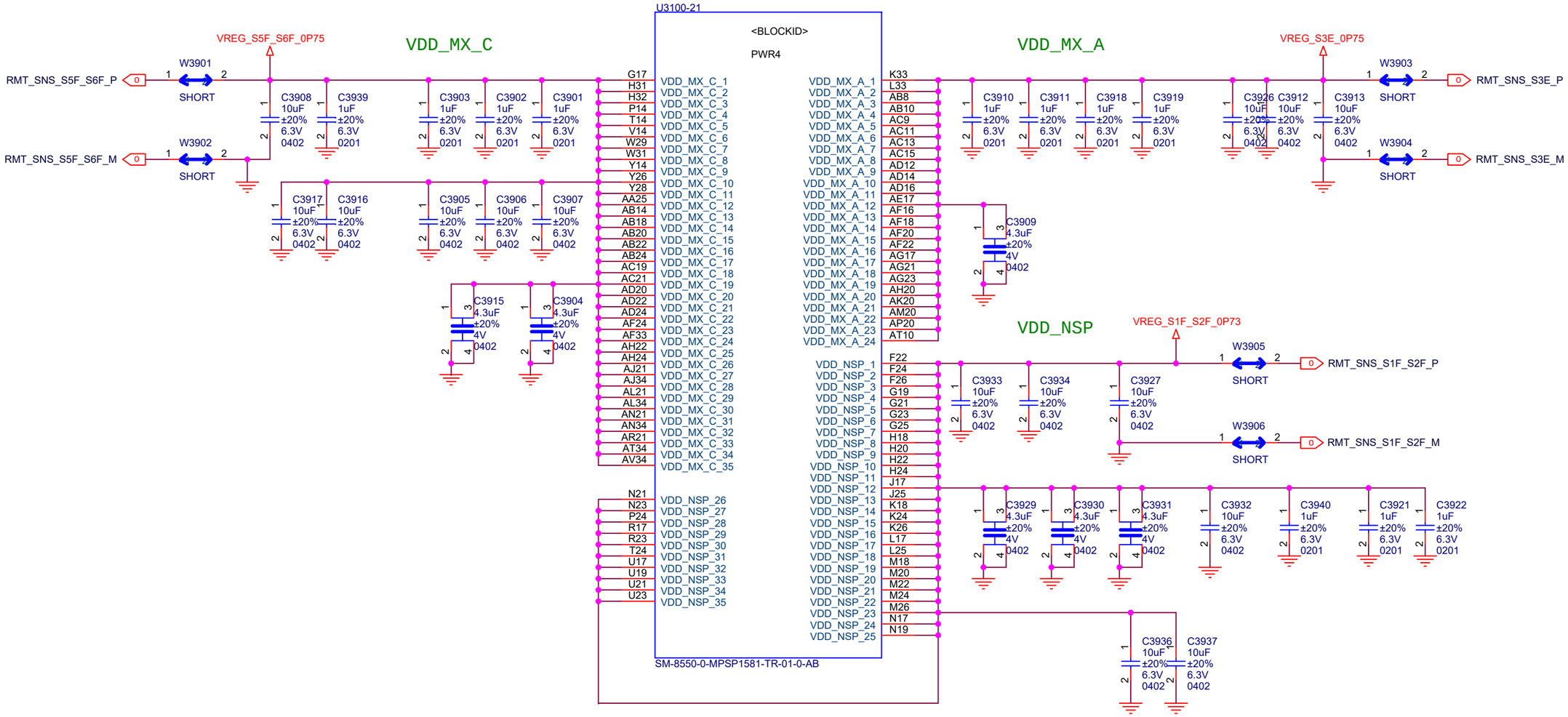

Title	L2_MAIN	
Size A3	Document Number SM8450 EVB	Rev
Date: Friday, July 29, 2022	Sheet 39	

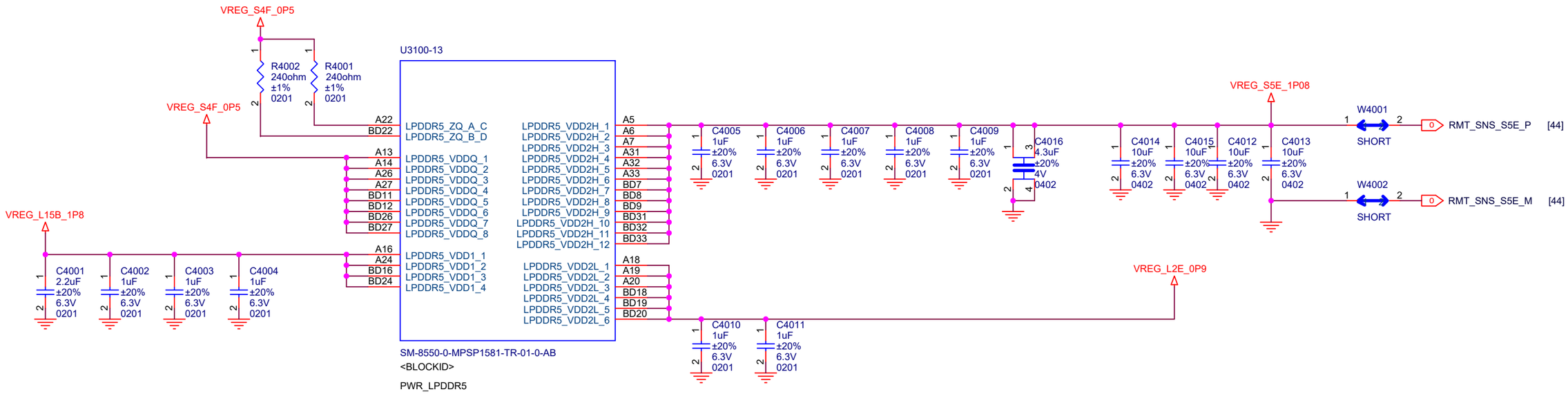

Title	L2_MAIN	
Size A3	Document Number SM8450 EVB	Rev
Date: Friday, July 29, 2022	Sheet 40 of	

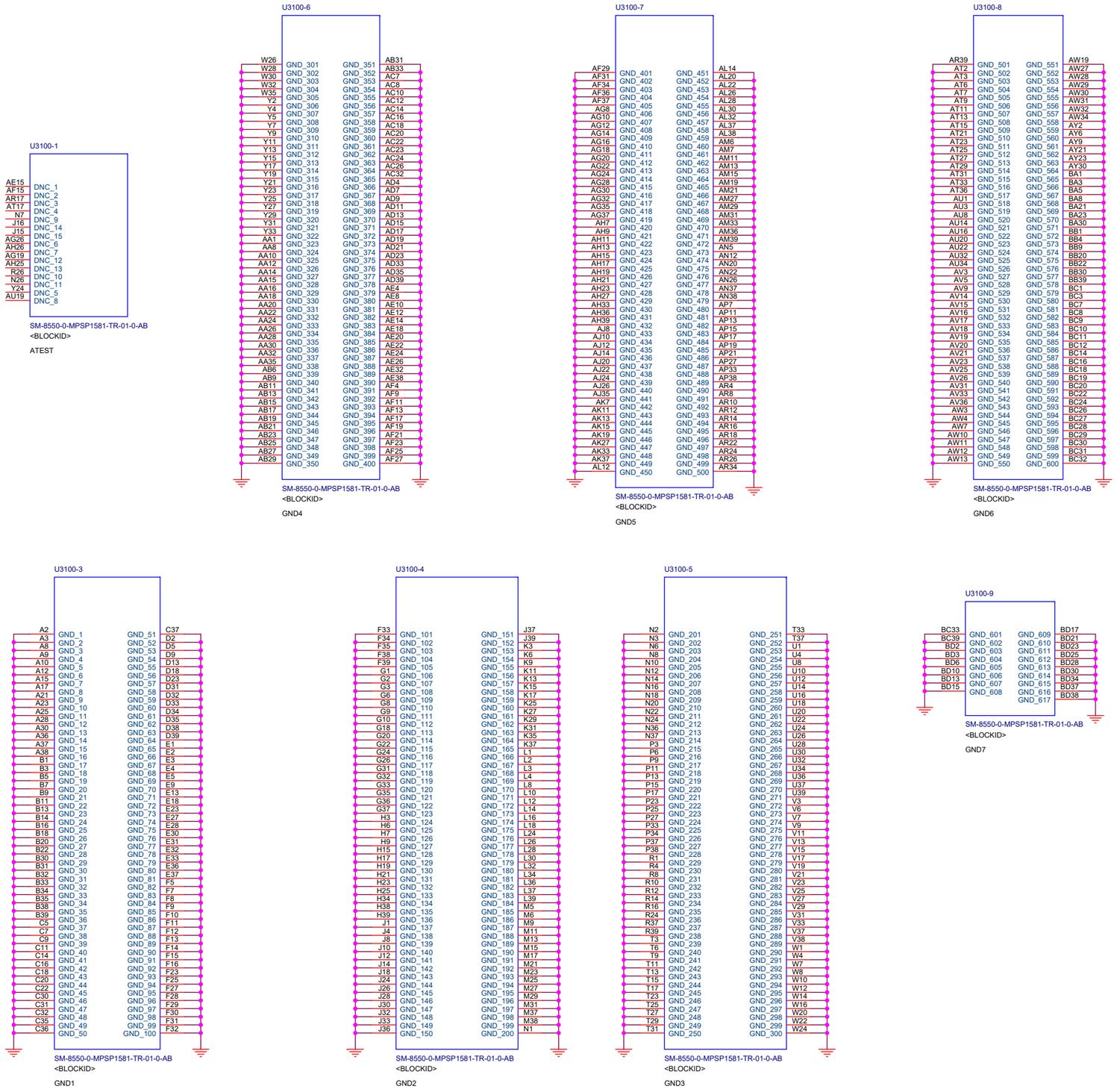

Title	I.2_MAIN	
Size A2	Document Number SM8450 EVB	Rev
Date: Friday, July 29, 2022	Sheet	

SPMI_CLK & SPMI_DATA should be routed away from noisy traces

BUILD ID按照原版本设计，后续按需求修改

GPIO 1/2/3 为option引脚，禁止用作其他用途

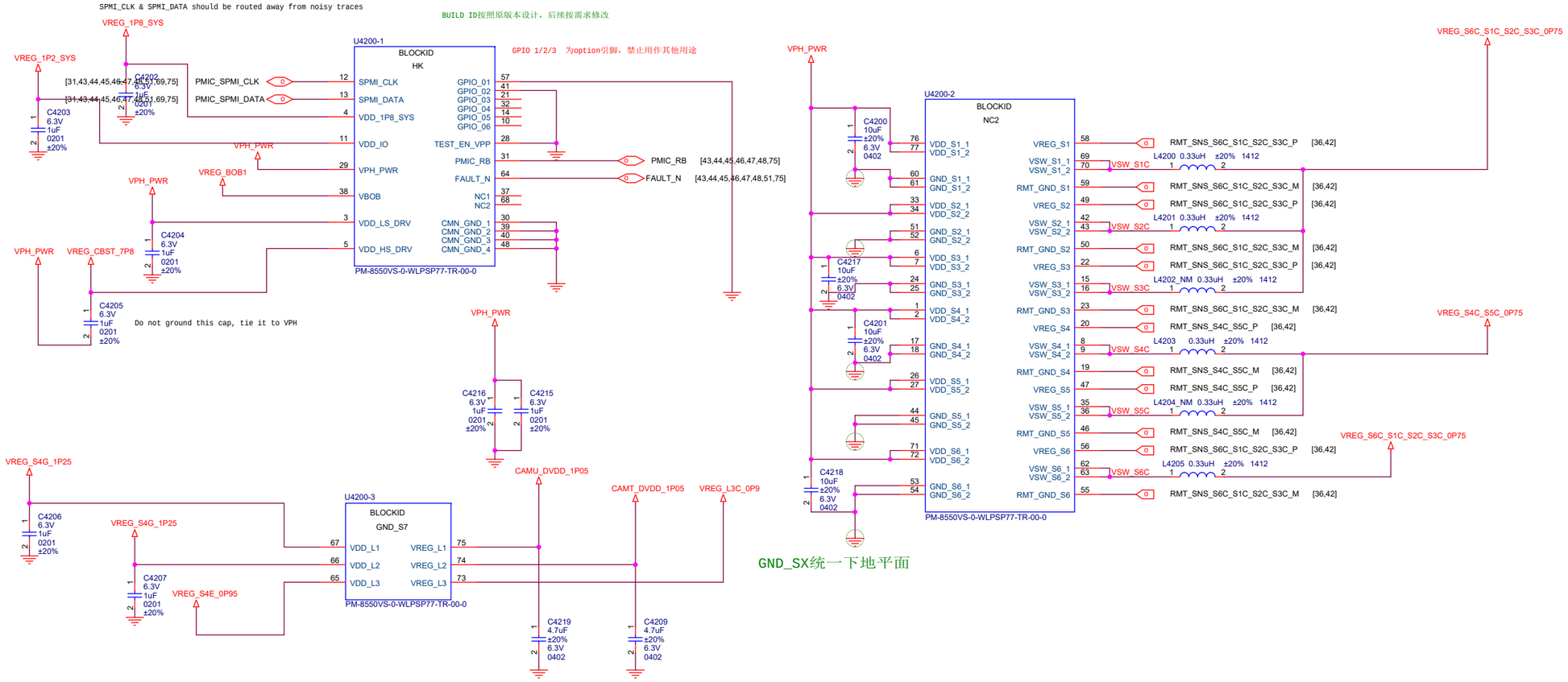

GND_SX统一下地平面

Title	L2_MAIN	
Size A2	Document Number PM8350 XO&CTRL	Rev
Date: Friday, July 29, 2022	Sheet 42	

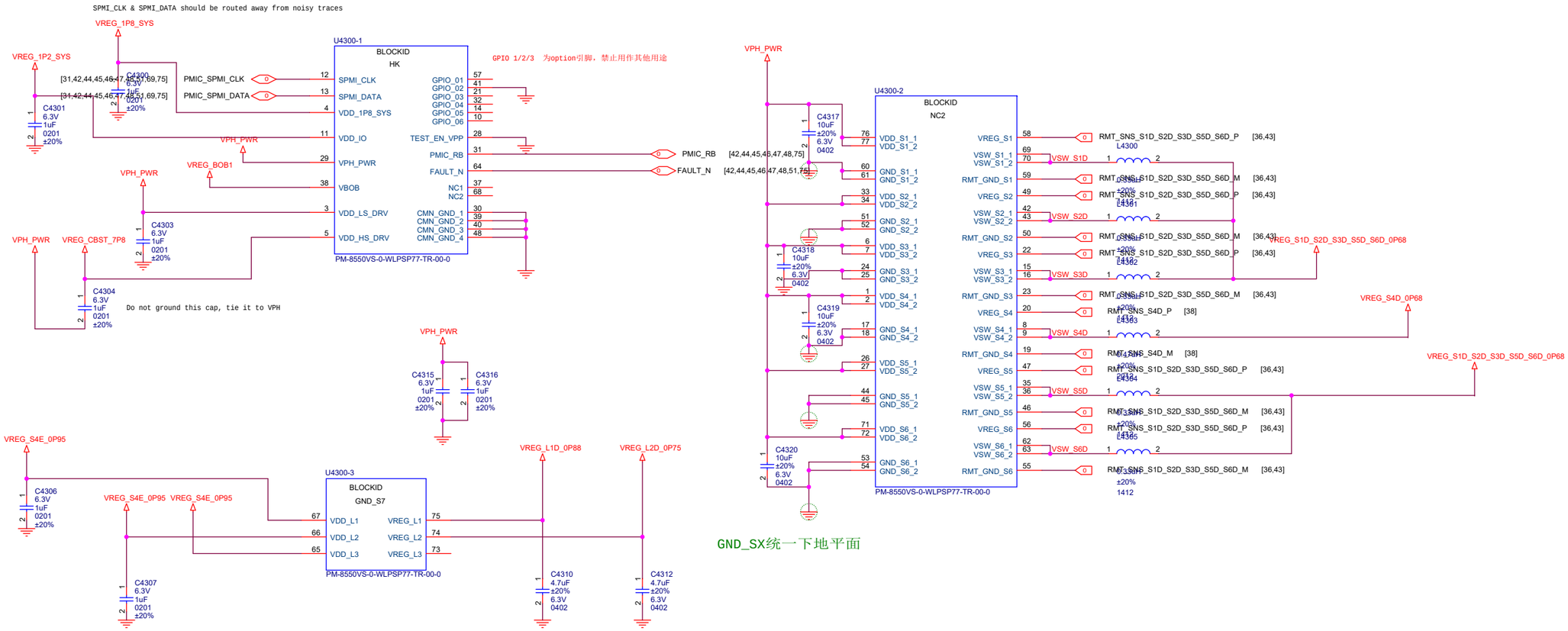

Title	L2_MAIN	
Size A2	Document Number SM8450 EVB	Rev
Date: Friday, July 29, 2022	Sheet 43	

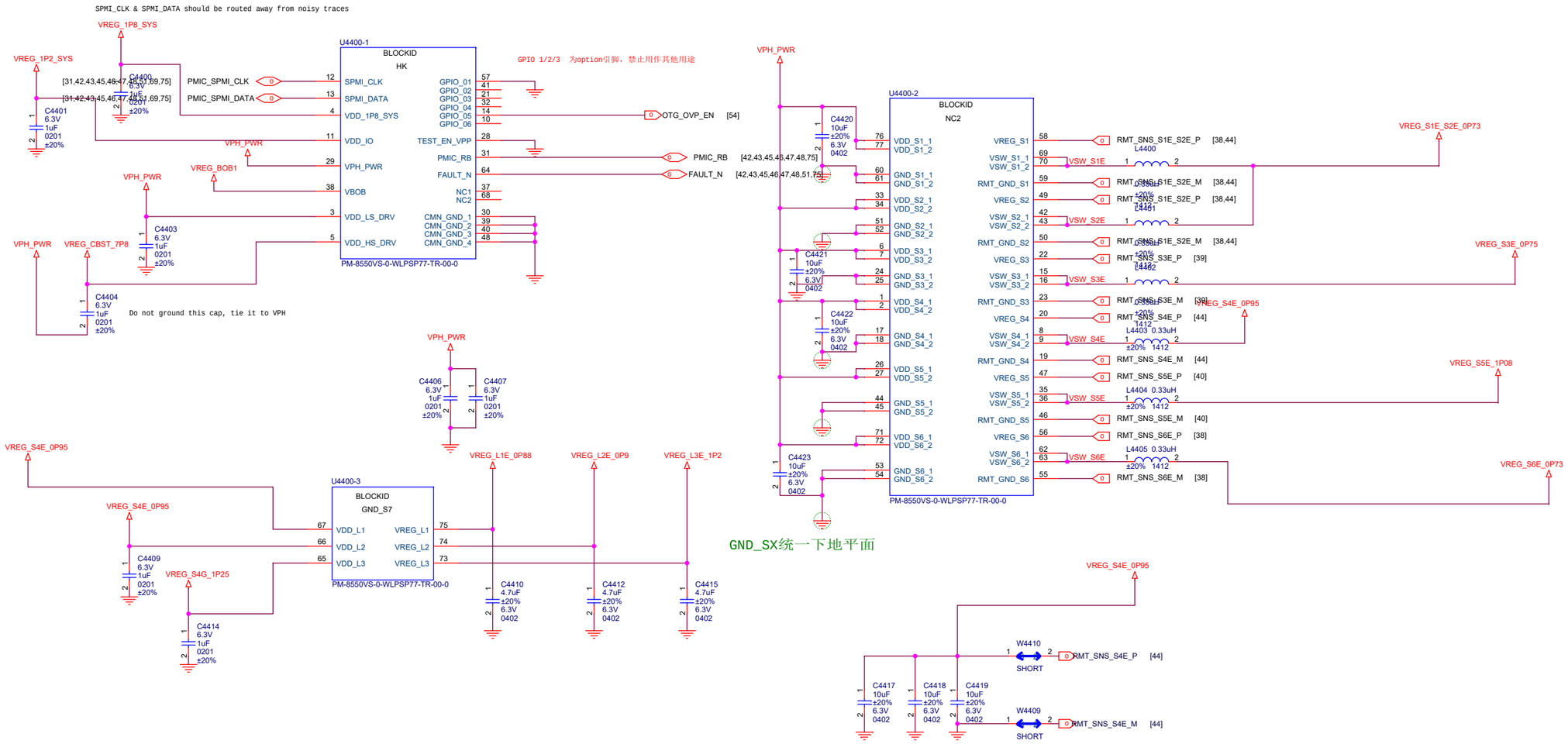

Title	L2_MAIN	
Size A2	Document Number SM8450 EVB	Rev
Date: Friday, July 29, 2022	Sheet	

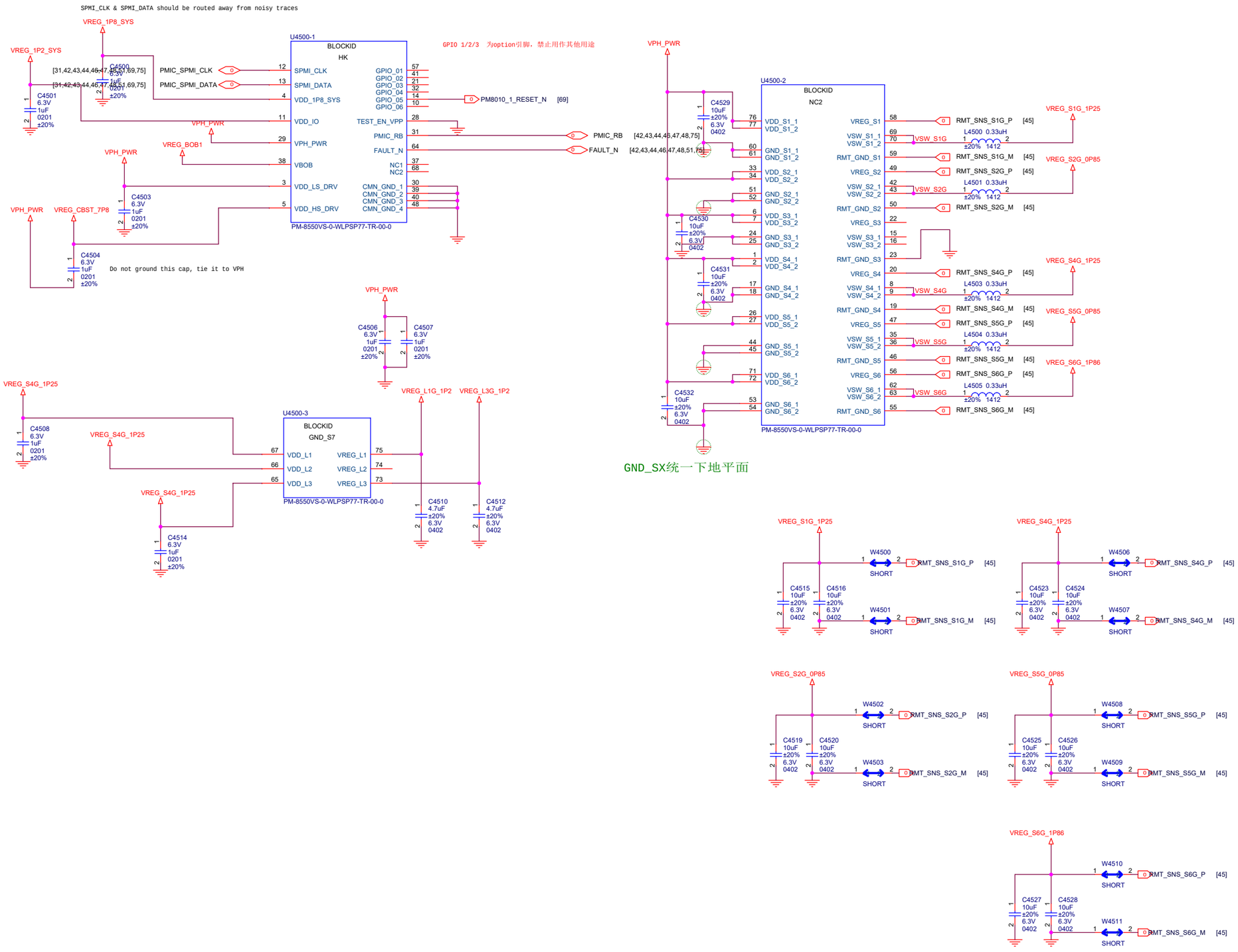

Title	L2_MAIN	
Size A2	Document Number PM8350 LDOs	Rev
Date: Friday, July 29, 2022	Sheet 45	

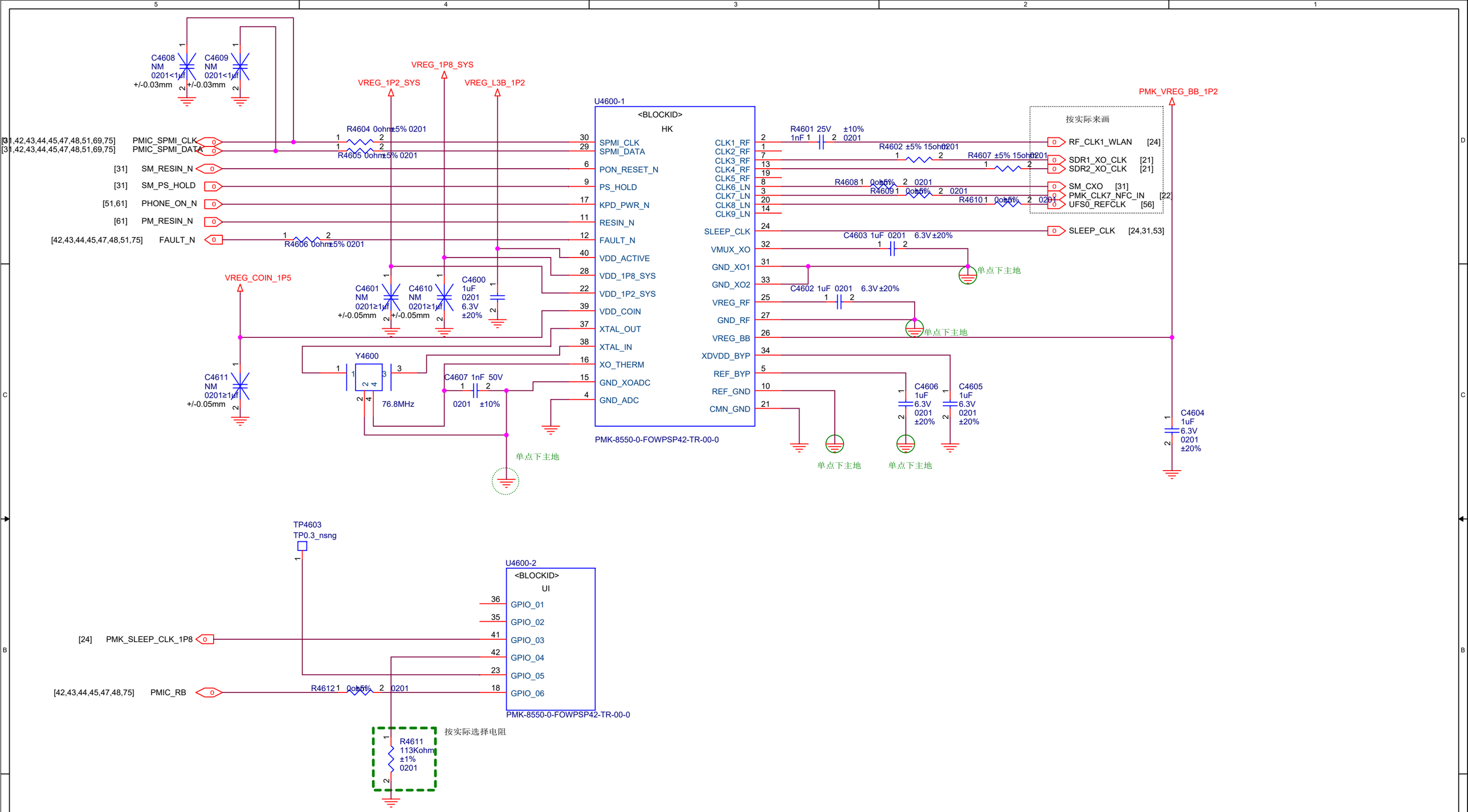

Title	L2_MAIN	
Size A3	Document Number SM8450 EVB	Rev
Date: Friday, September 16, 2022	Sheet 46	

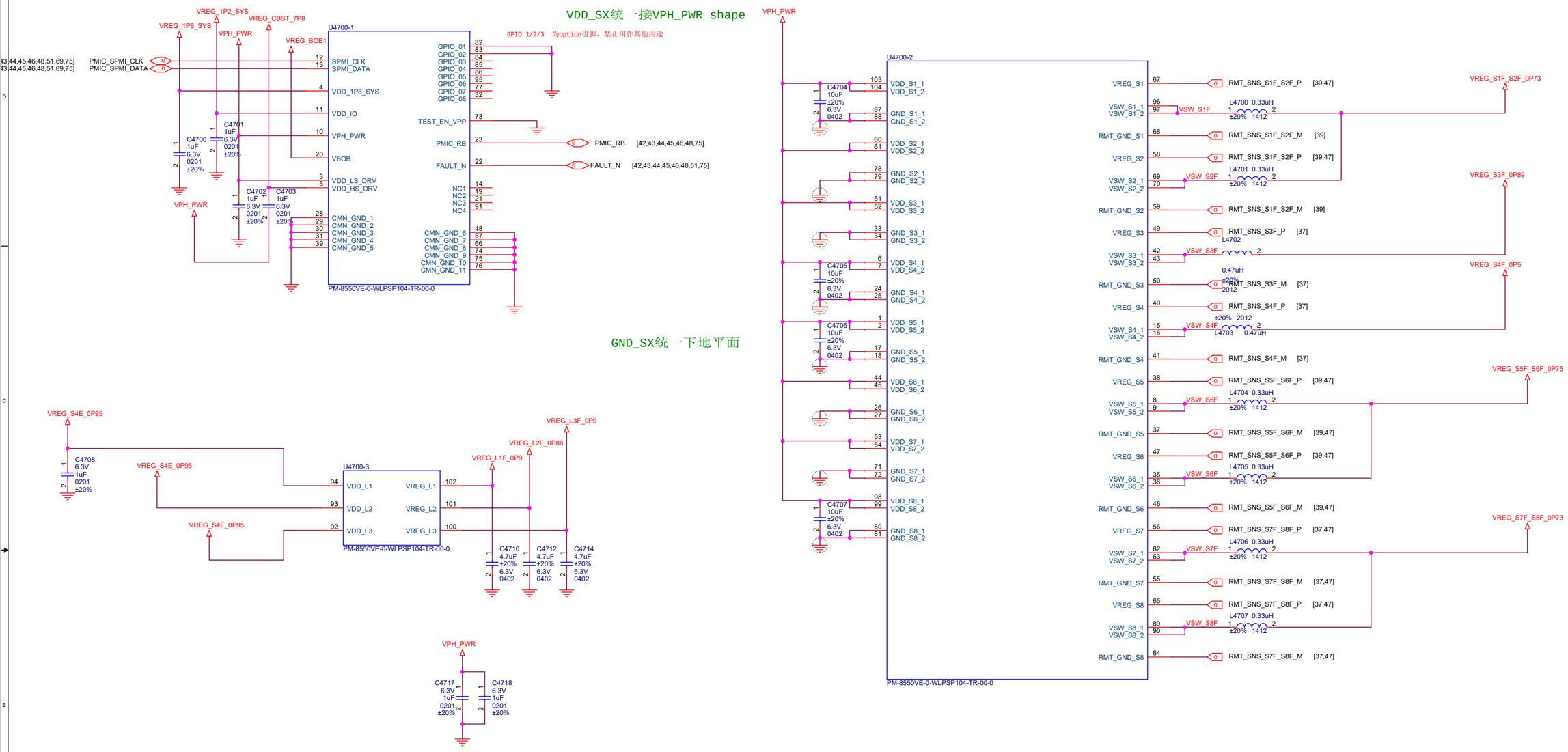

Title	L2_MAIN
Size A2	Document Number PM8350C CTRL&GND
Rev	
Date: Friday, July 29, 2022	Sheet

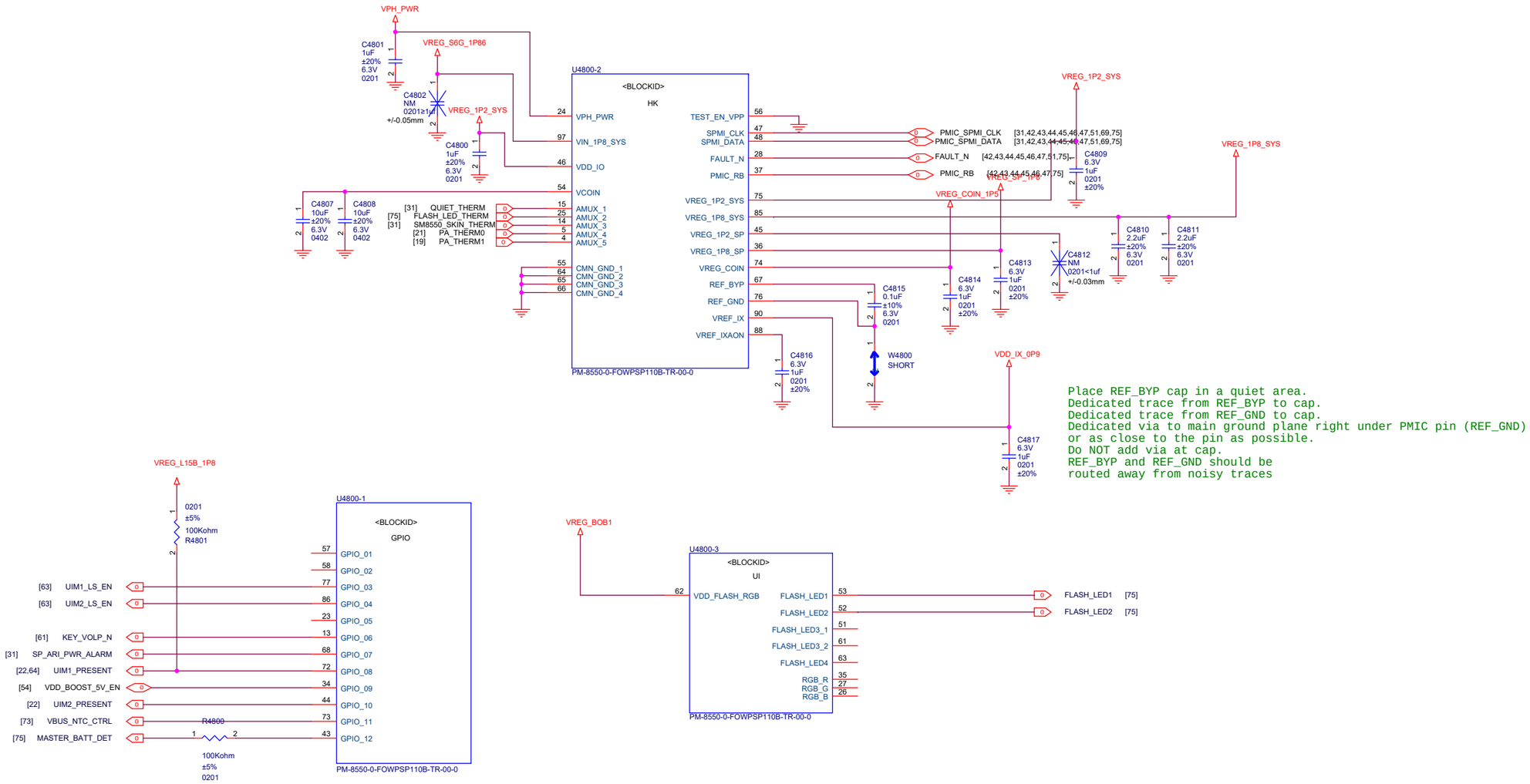

Place REF_BYP cap in a quiet area.
Dedicated trace from REF_BYP to cap.
Dedicated trace from REF_GND to cap.
Dedicated via to main ground plane right under PMIC pin (REF_GND)
or as close to the pin as possible.
Do NOT add via at cap.
REF_BYP and REF_GND should be
routed away from noisy traces

Title	L2_MAIN	
Size A2	Document Number SM8450 EVB	Rev
Date: Friday, July 29, 2022	Sheet 48	

后续按实际进行修改

L9C default off , USE-->CAP
L9C default off , UNUSED-->NO CAP
L9C default ON , UNUSED-->BOB PULL UP

U4800-5
<BLOCKID>
VREG2
PM-8550-0-FOWPSP110B-TR-00-0

Pin	Net
99	VDD_L1_L4_L10_1
110	VDD_L1_L4_L10_2
82	VDD_L2_L13_L14
78	VDD_L3
92	VDD_L5_L16_1
101	VDD_L5_L16_2
93	VDD_L6_L7
94	VDD_L8_L9
96	VDD_L11
98	VDD_L12
89	VDD_L15
39	VDD_L17
100	VREG_L1
83	VREG_L2
79	VREG_L3
108	VREG_L4
103	VREG_L5
91	VREG_L6
84	VREG_L7
95	VREG_L8
104	VREG_L9
109	VREG_L10
105	VREG_L11_S
106	VREG_L11
87	VREG_L12_S
107	VREG_L12
81	VREG_L13
71	VREG_L14
80	VREG_L15
102	VREG_L16
40	VREG_L17

VREG_S6G_1P86
C4906 6.3V 1uF 0201 ±20%
VREG_S4G_1P25
VREG_BOB1
C4907 6.3V 1uF 0201 ±20%
VREG_BOB1
VREG_BOB1
VREG_S4G_1P25
C4908 6.3V 1uF 0201 ±20%
VREG_S6G_1P86
VREG_BOB2

VREG_L1B_1P8
VREG_L2B_3P0
VREG_L3B_1P2
VREG_L5B_3P1
VREG_L6B_1P8
VREG_L4B_1P8
VREG_L7B_1P8
VREG_L9B_3P0
VREG_L8B_3P0
VREG_L10B_1P8
RMT_SNS_L12B_P [64]
VREG_L12B_1P8
VREG_L13B_3P0
CAMW_VCM_3P1
VREG_L15B_1P8
VREG_L16B_3P1
VREG_L17B_2P5

R4901 NM 01005 +/-0.02mm

C4910 2.2uF ±20% 6.3V 0201
C4912 6.3V 1uF 0201 ±20%
C4921 NM 0201≥1uf +/-0.05mm
C4920 6.3V 1uF 0201 ±20%
C4913 6.3V 1uF 0201 ±20%
C4902 4.7uF ±20% 6.3V 0402
C4918 6.3V 1uF 0201 ±20%
C4919 6.3V 1uF 0201 ±20%
C4909 4.7uF ±20% 6.3V 0402
C4916 6.3V 1uF 0201 ±20%
C4901 10uF ±20% 6.3V 0402
C4917 2.2uF ±20% 6.3V 0201
C4904 4.7uF ±20% 6.3V 0402

Title	L2_MAIN	
Size A3	Document Number SM8450 EVB	Rev
Date: Friday, July 29, 2022	Sheet 49	

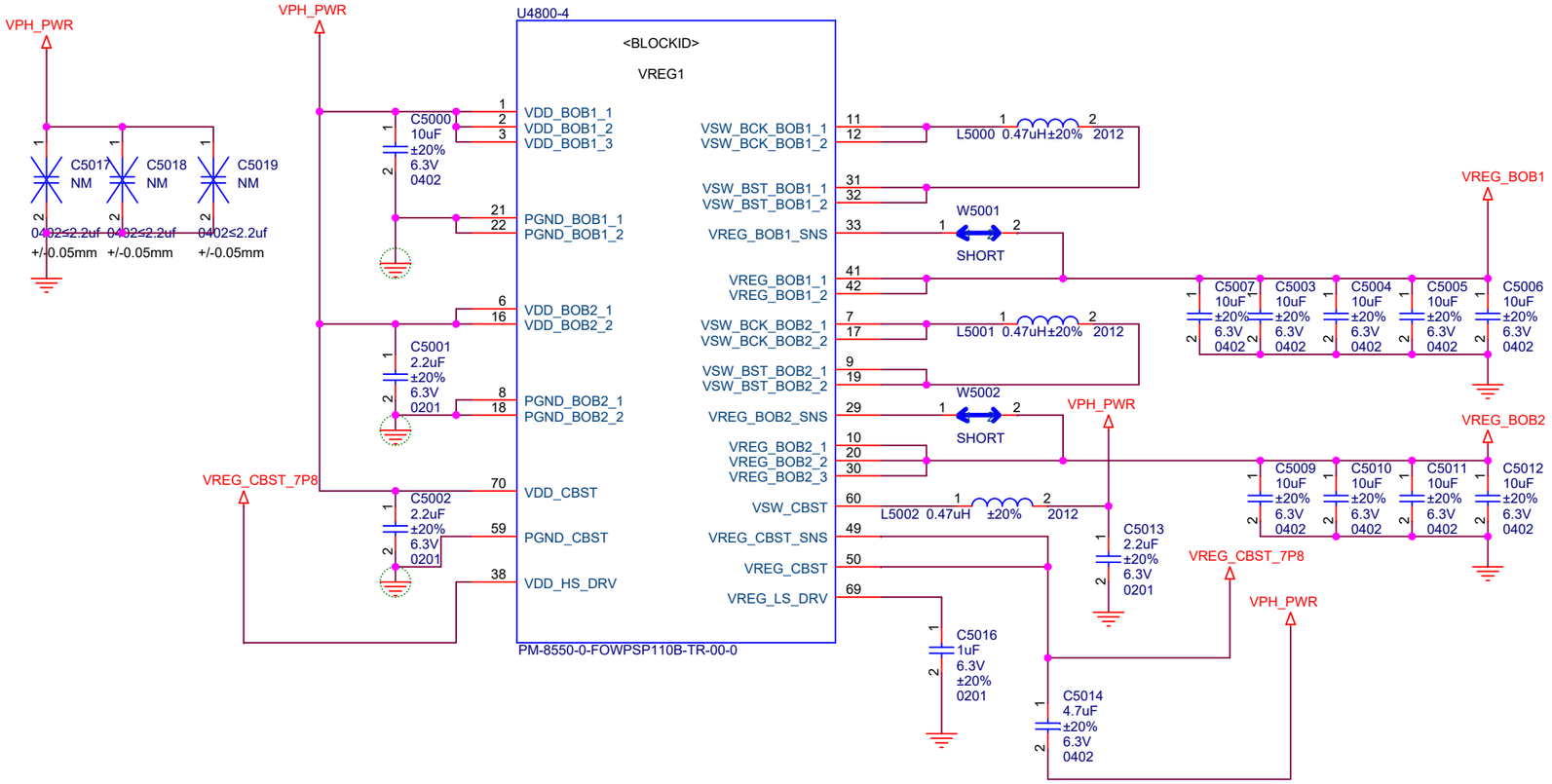

Title	L2_MAIN	
Size A3	Document Number PM8350C LDOs	Rev
Date: Friday, July 29, 2022	Sheet	

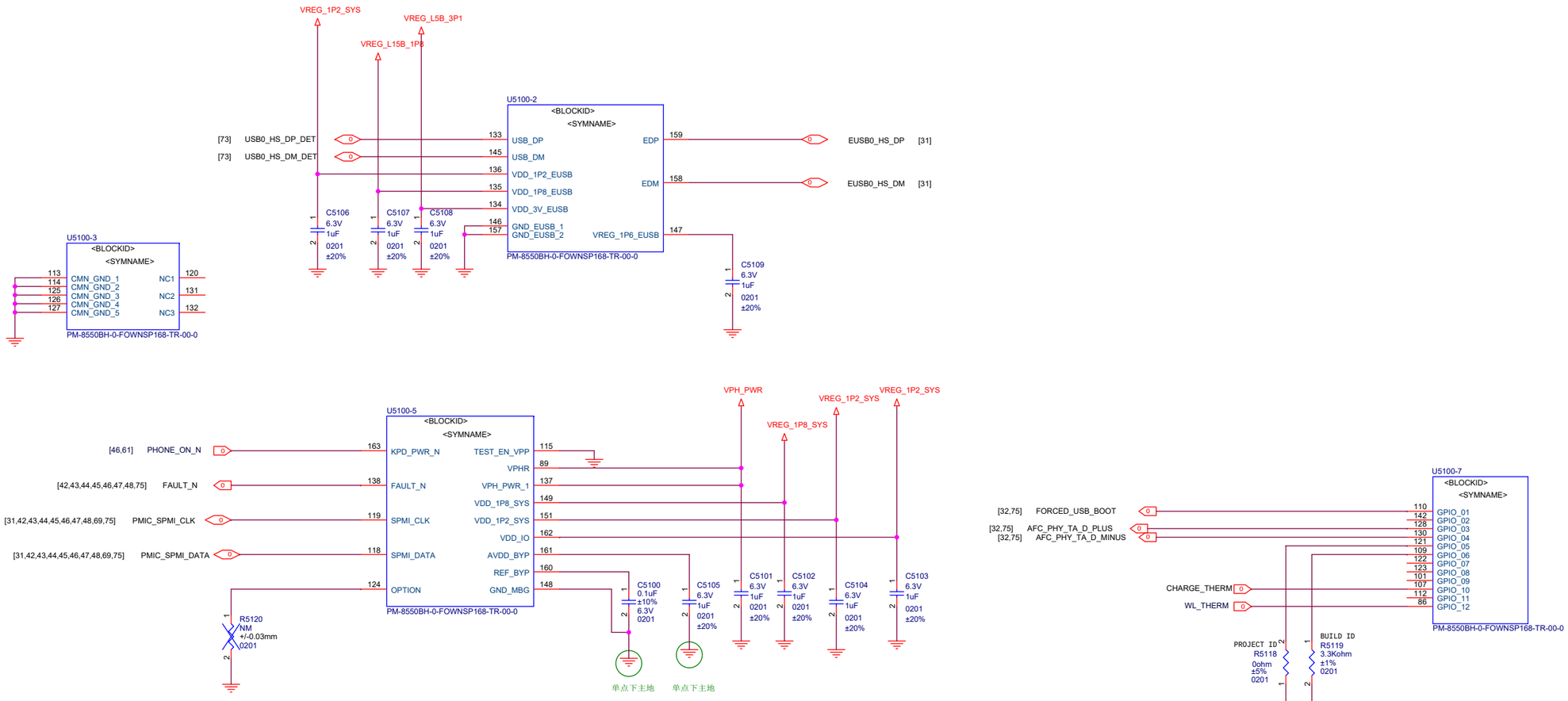

Title	L2_MAIN	
Size A2	Document Number PM8450 HK IO&LDO	Rev
Date: Tuesday, August 30, 2022	Sheet	

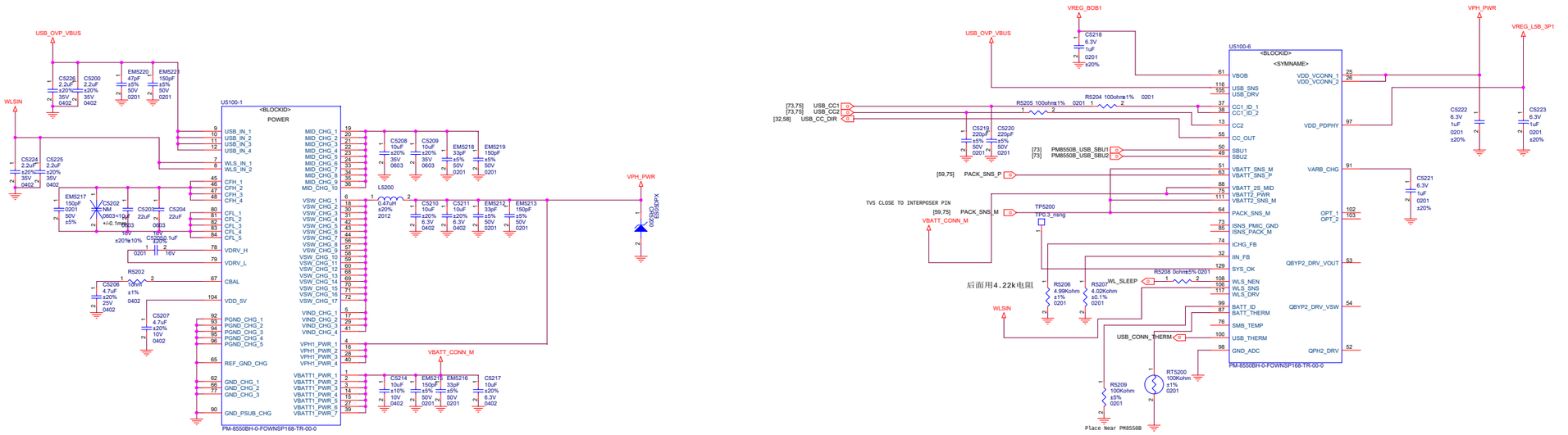

Title	L2_MAIN	
Size A1	Document Number SM8450 EVB	Rev
Date: Friday, September 16, 2022	Sheet 52 of 79	

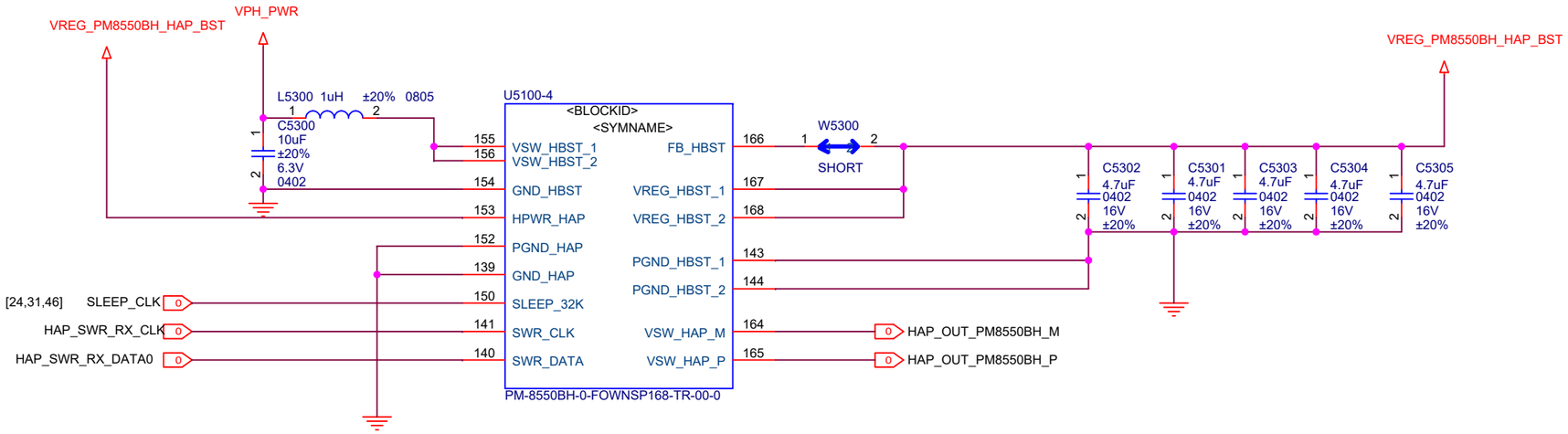

Title	L2_MAIN	
Size A3	Document Number PM8350B CTRL&GND	Rev
Date: Friday, July 29, 2022	Sheet 53	

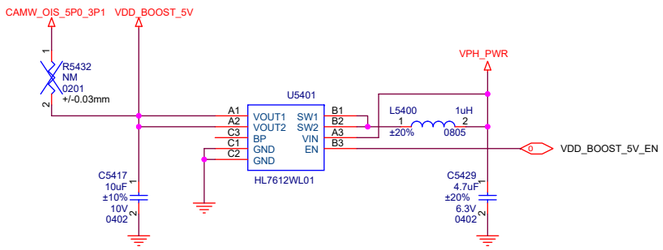

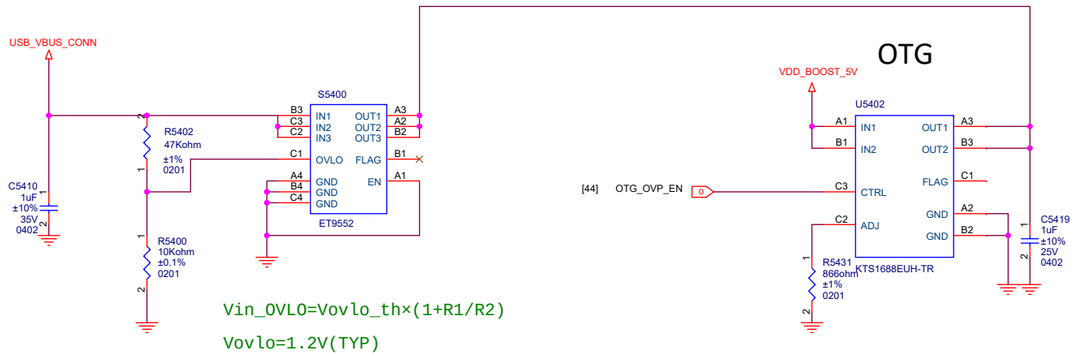

Vin_OVLO=Vovlo_th×(1+R1/R2)

Vovlo=1.2V(TYP)

Title	L2_MAIN	
Size A2	Document Number PM8350B HAPTIC&OLED	Rev
Date: Friday, July 29, 2022	Sheet 54 of	

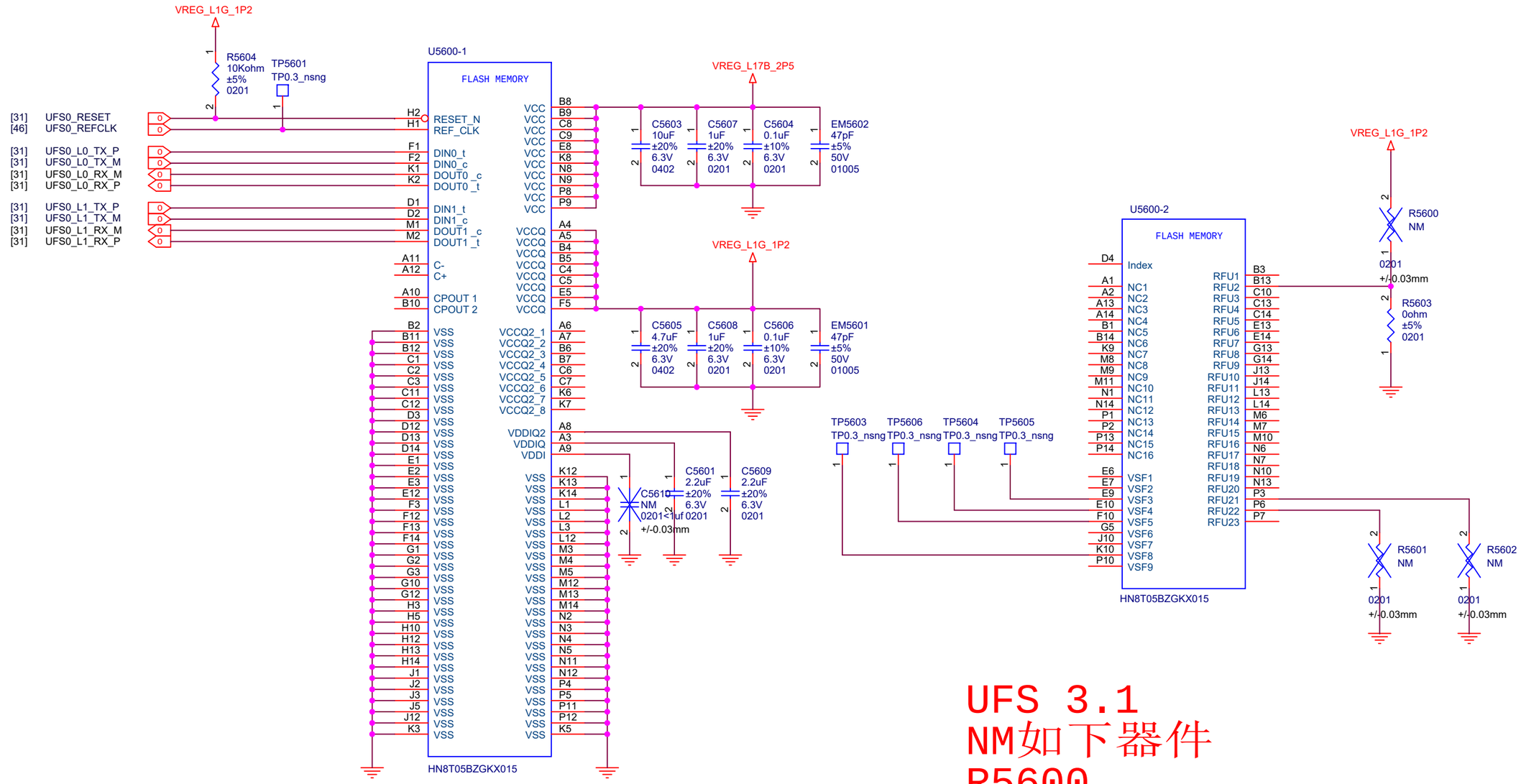

UFS 3.1
NM如下器件
R5600
R5601
R5602
R5603
UFS 4.0待确认

Title	L2_MAIN	
Size A3	Document Number SM8450 EVB	Rev
Date: Friday, September 16, 2022	Sheet 56 of 79	

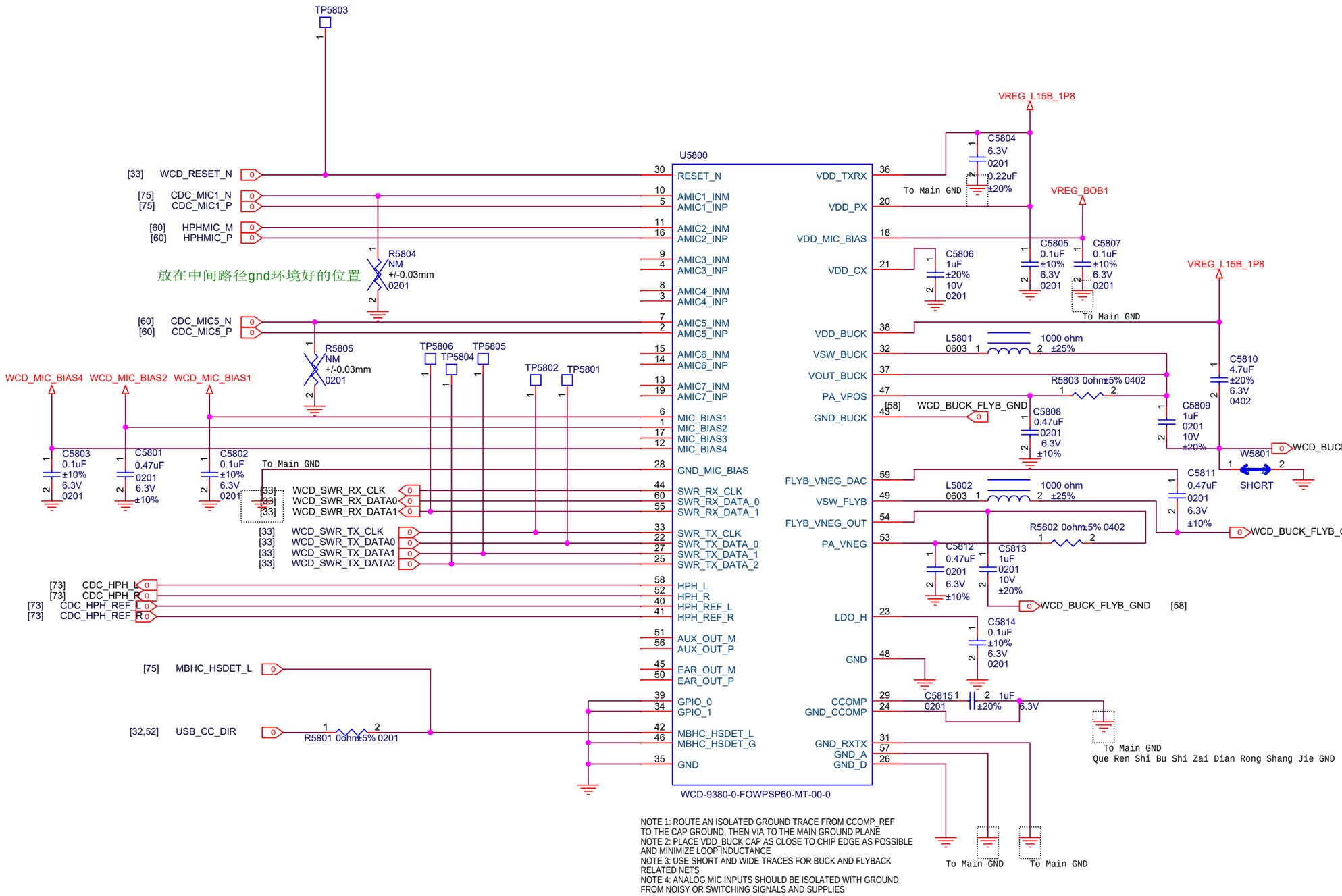

NOTE 1: ROUTE AN ISOLATED GROUND TRACE FROM CCOMP_REF TO THE CAP GROUND, THEN VIA TO THE MAIN GROUND PLANE
NOTE 2: PLACE VDD_BUCK CAP AS CLOSE TO CHIP EDGE AS POSSIBLE AND MINIMIZE LOOP INDUCTANCE
NOTE 3: USE SHORT AND WIDE TRACES FOR BUCK AND FLYBACK RELATED NETS
NOTE 4: ANALOG MIC INPUTS SHOULD BE ISOLATED WITH GROUND FROM NOISY OR SWITCHING SIGNALS AND SUPPLIES

Title	L2_MAIN	
Size A3	Document Number WCD9380	Rev
Date: Friday, September 16, 2022	Sheet 58	

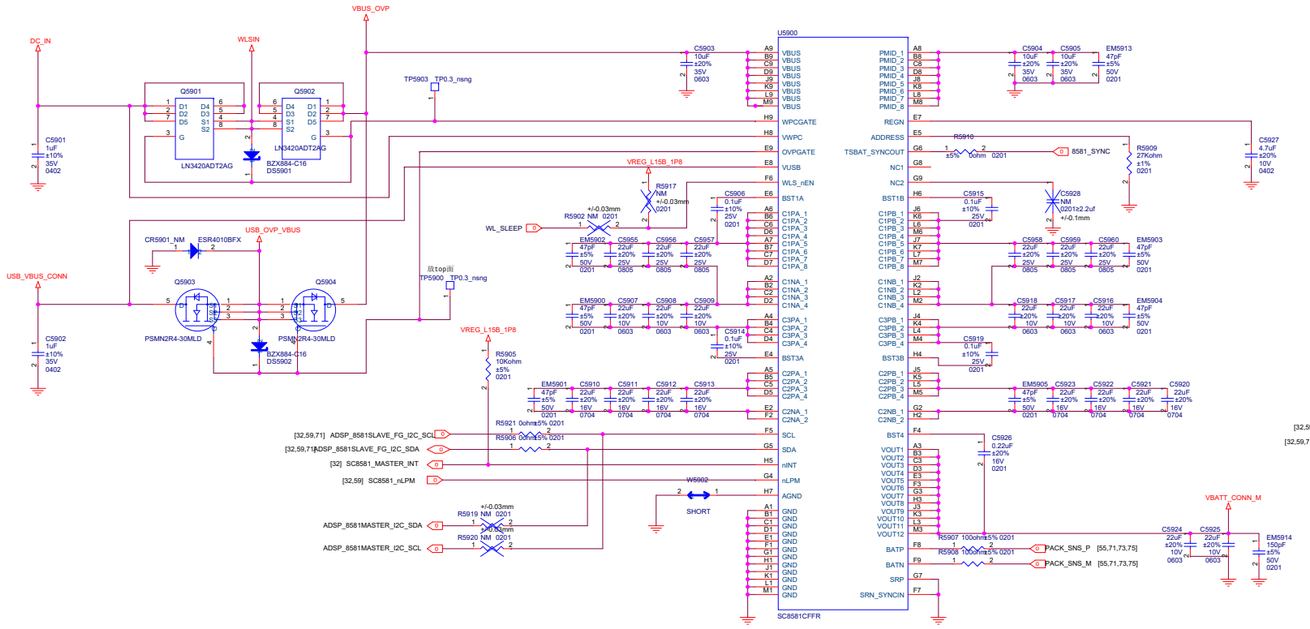

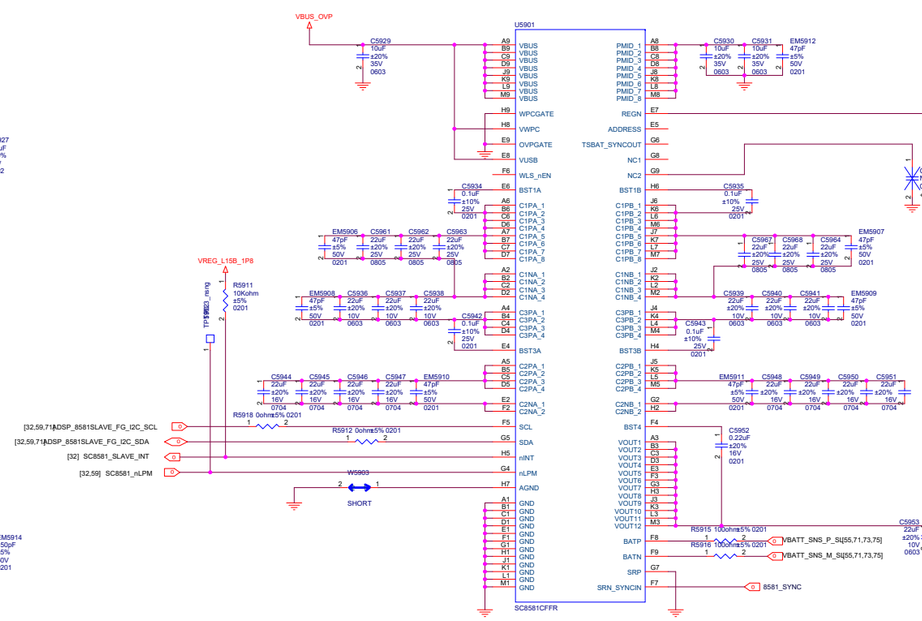

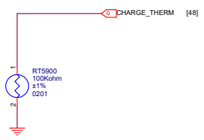

Title	L2_MAIN	
Size A1	Document Number SC8581	Rev
Date: Friday, September 16, 2022	Sheet 59	

HEADSET

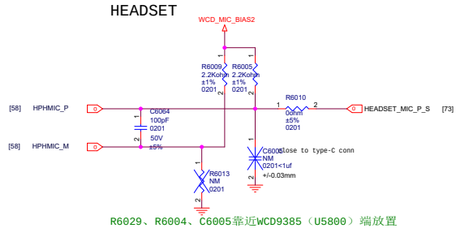

R6029、R6004、C6005靠近WCD9385（U5800）端放置

AUX MIC

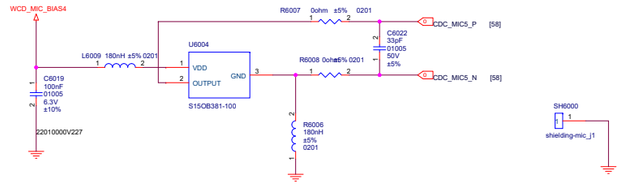

SPKR TOP

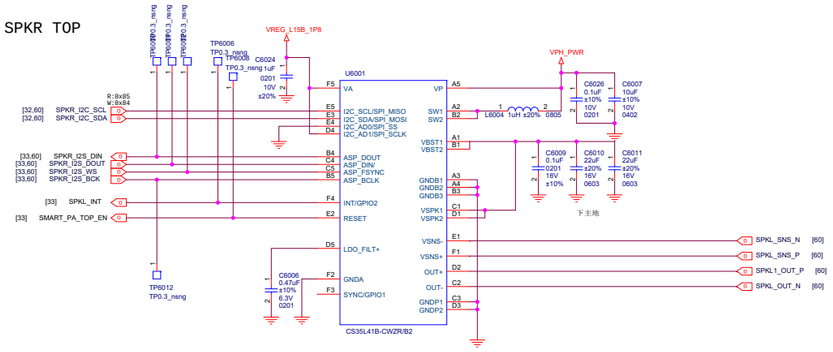

SPKR BOT

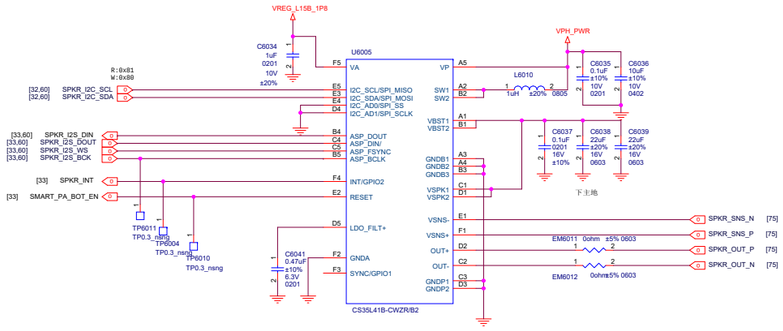

SPKR RECEIVER

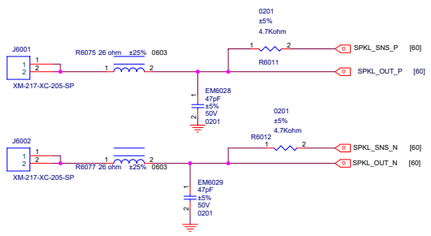

RECEIVER MOS

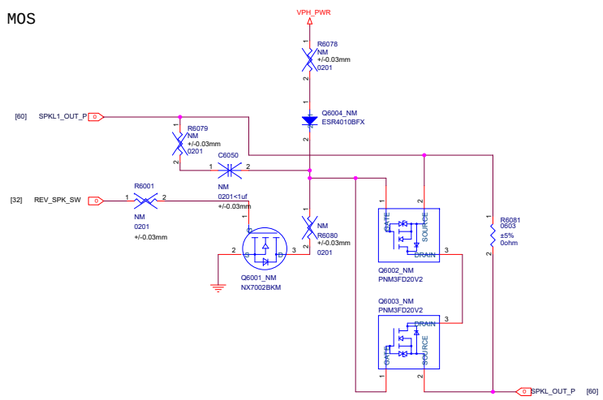

Title	L2_MAIN	
Size A1	Document Number AUDIO	Rev
Date: Friday, September 16, 2022	Sheet	

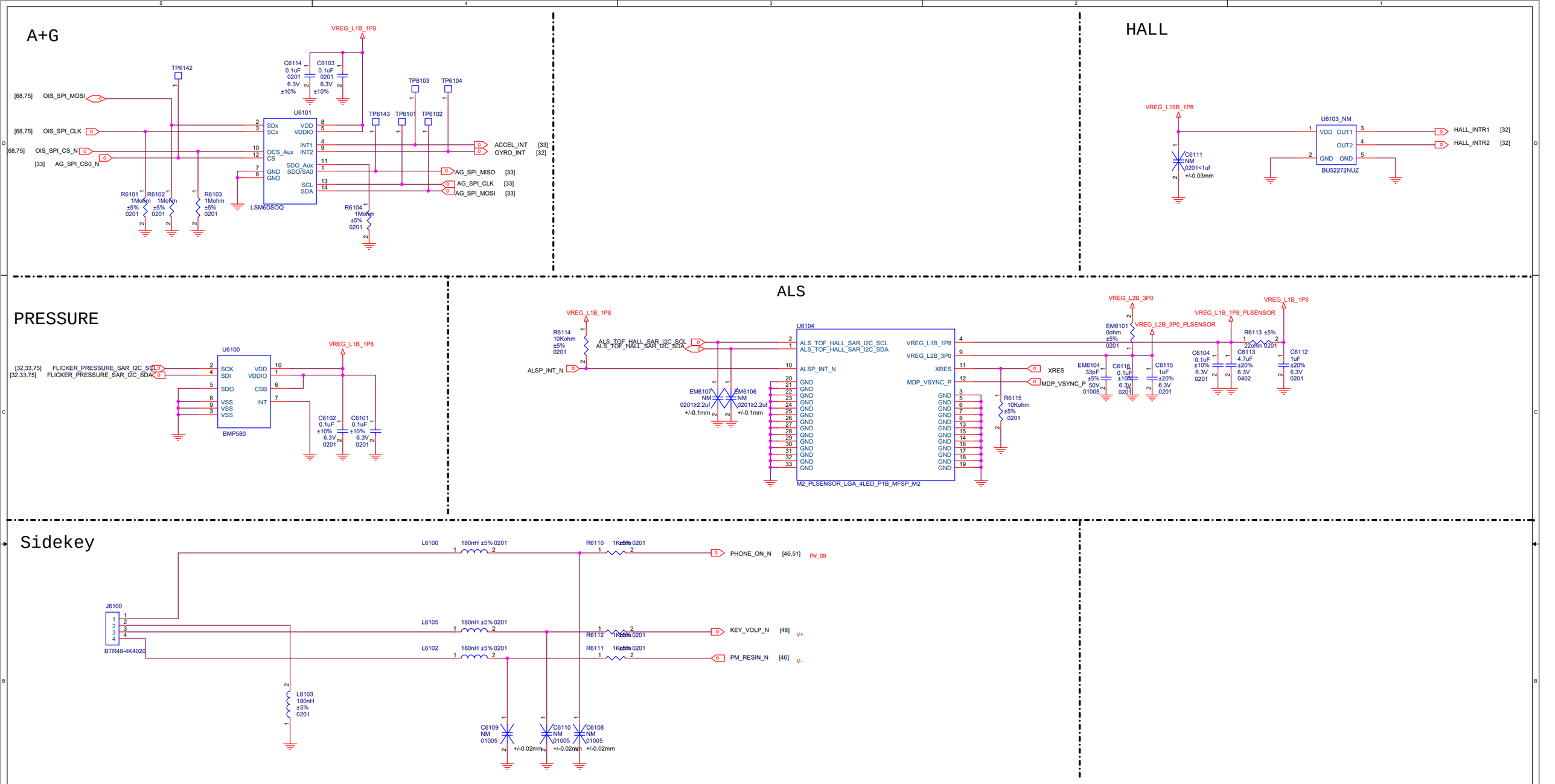

Title	L2_MAIN
Size A2	Document Number SENSOR
Rev	
Date: Friday, September 16, 2022	Sheet

COMPASS

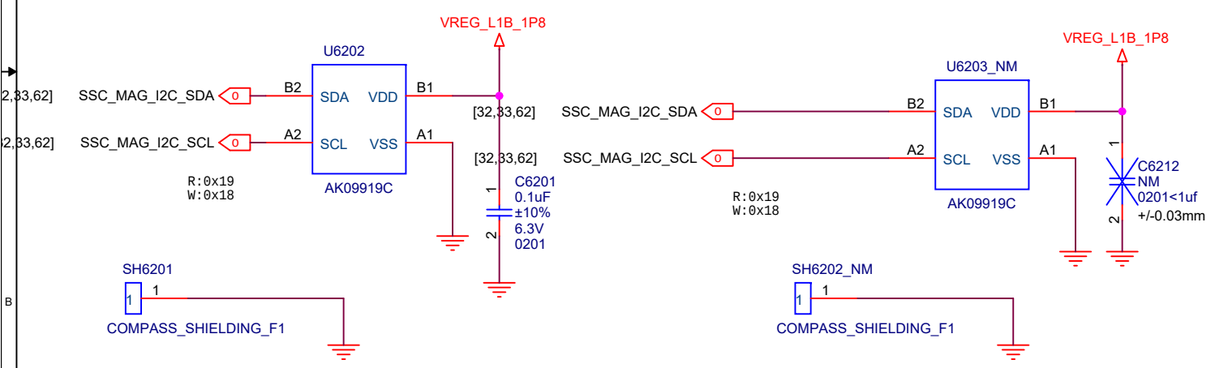

INFRARED

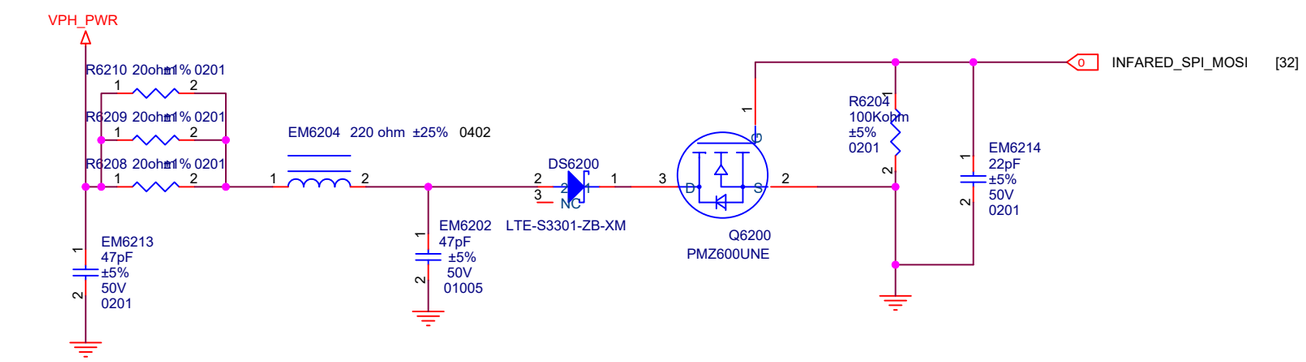

HAPTICS

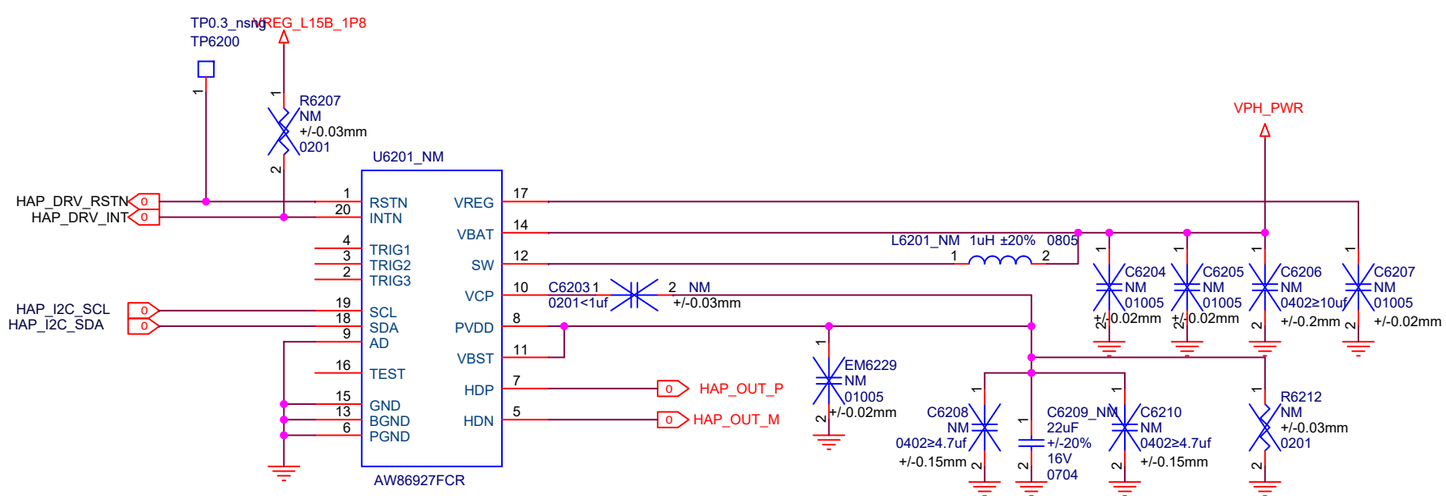

Title	L2_MAIN	
Size A3	Document Number SENSOR-2	Rev
Date: Friday, September 16, 2022	Sheet 62 of 79	

LEVEL SHIFTER

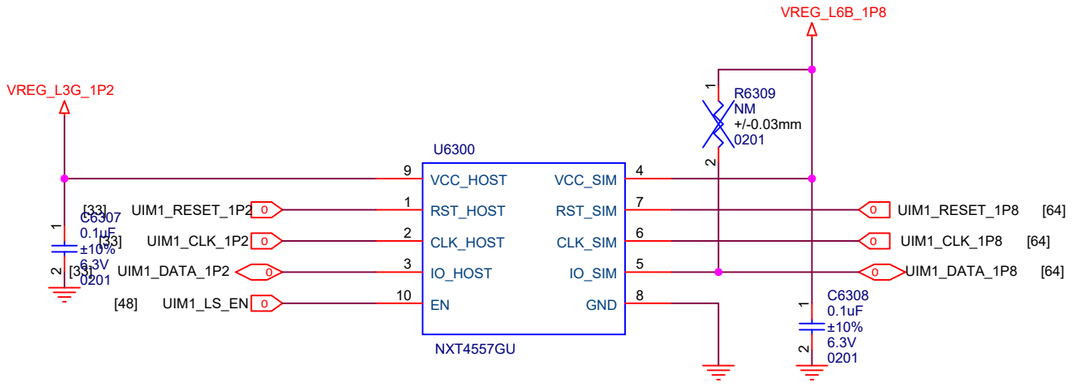

LEVEL SHIFTER

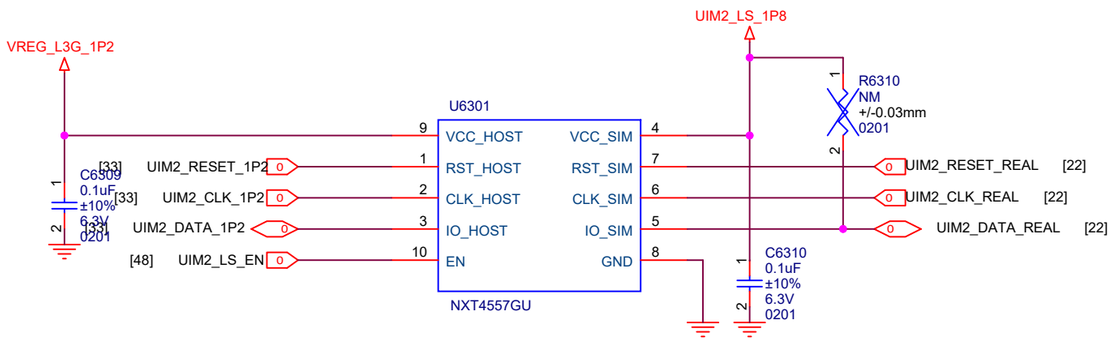

Title	L2_MAIN	
Size A3	Document Number SIM	Rev
Date: Friday, July 29, 2022	Sheet 63	

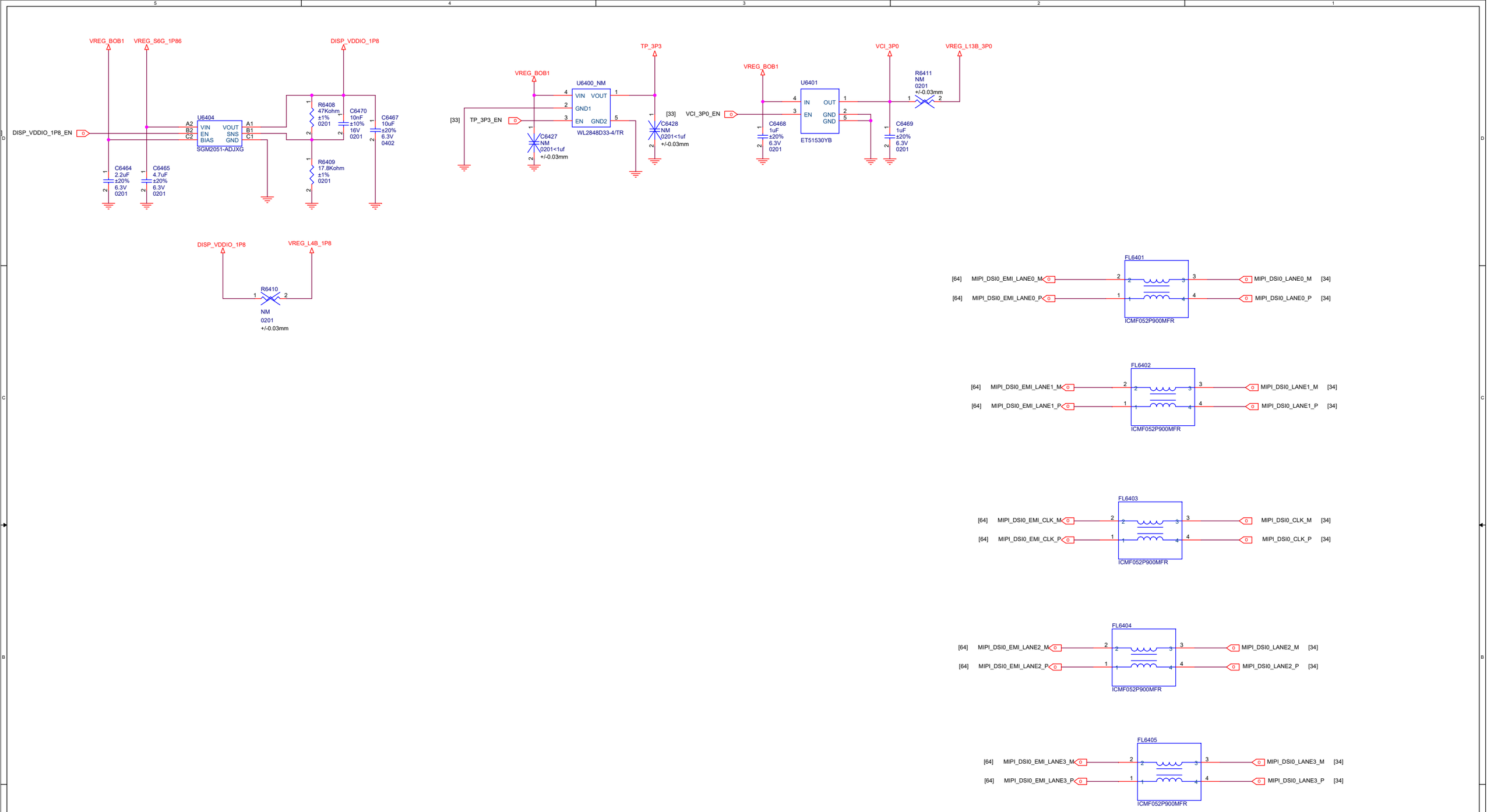

Title	L2_MAIN	
Size A2	Document Number AMOLED	Rev
Date: Friday, July 29, 2022	Sheet 64	

SEC_BAT_BtoB

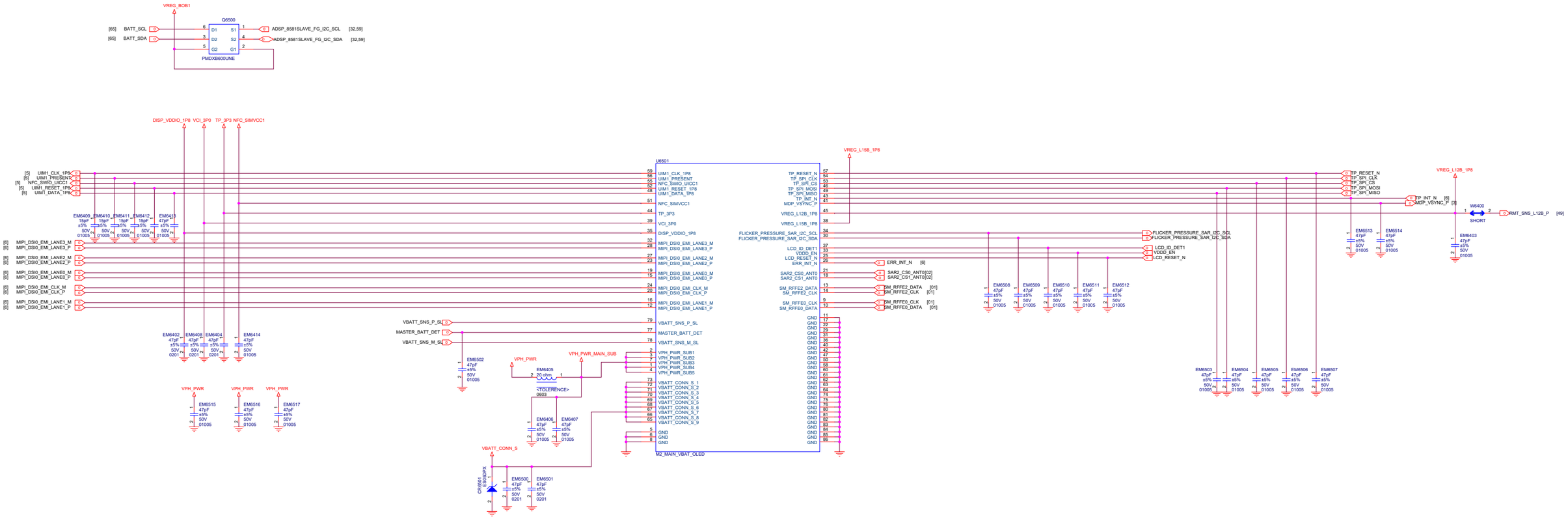

Title	L2_MAIN
Size A1	Document Number 81T8
Date:	Friday, September 16, 2022 Sheet

FRONT_32M-OV32C

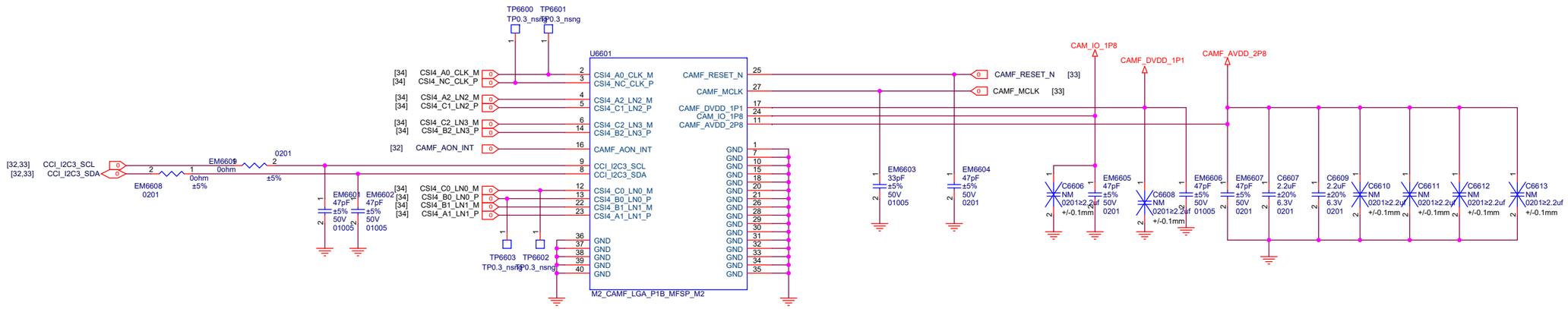

Title	L2_MAIN	
Size A2	Document Number BTB	Rev
Date: Friday, September 16, 2022	Sheet 66	

TELE_50M-JN1

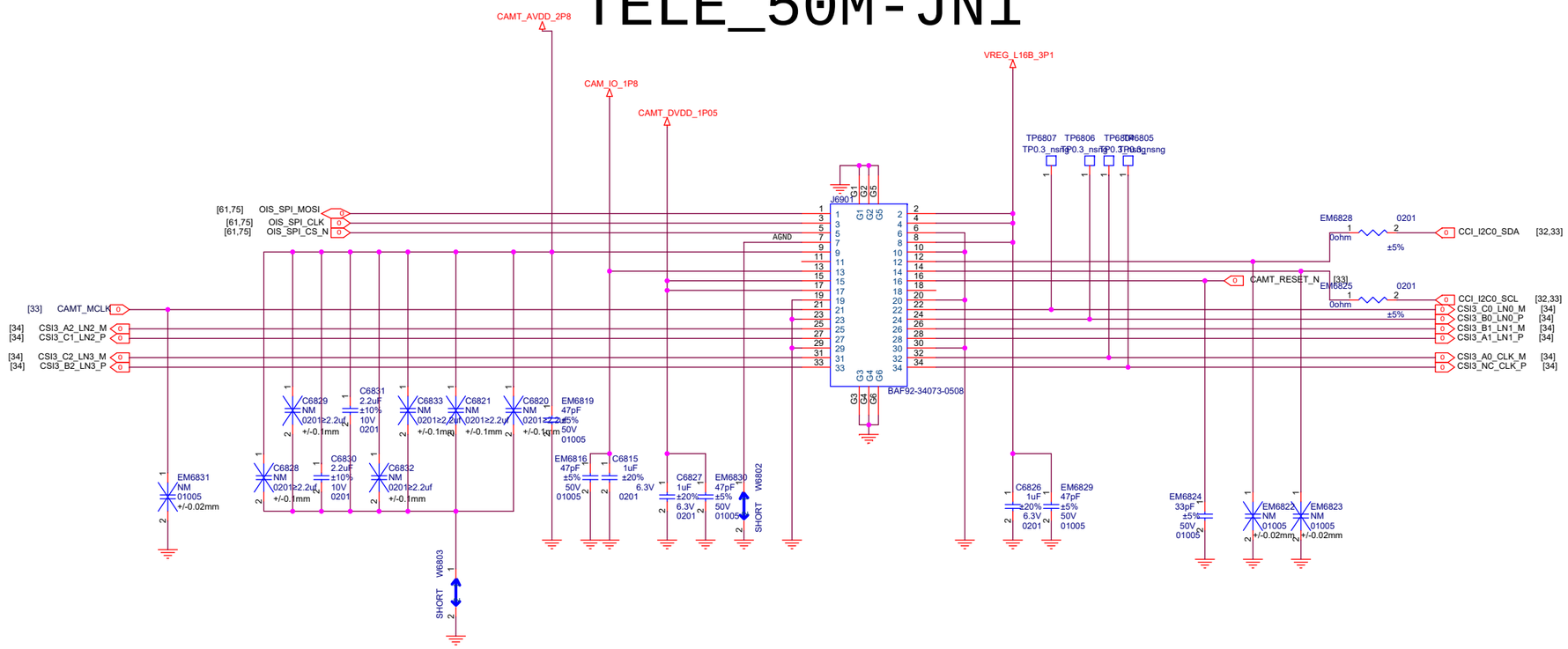

Title	M2_MAIN	
Size A2	Document Number ANT1	Rev
Date: Friday, September 16, 2022	Sheet	

WIDE_50M-IMX989

TELE_3X_50M-JN1

TELE_DVDD

AVDD

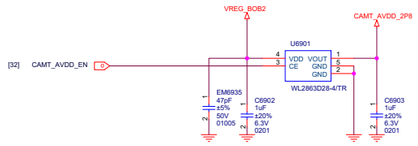

WIDE OIS_5P0

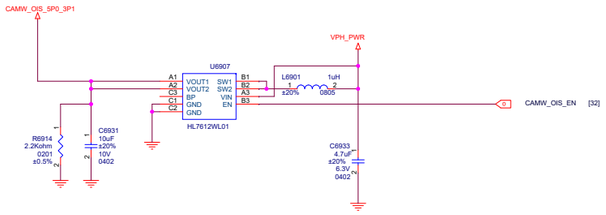

ULTRA_DVDD

此处网络为L2项目，新项目待修改

PM8010

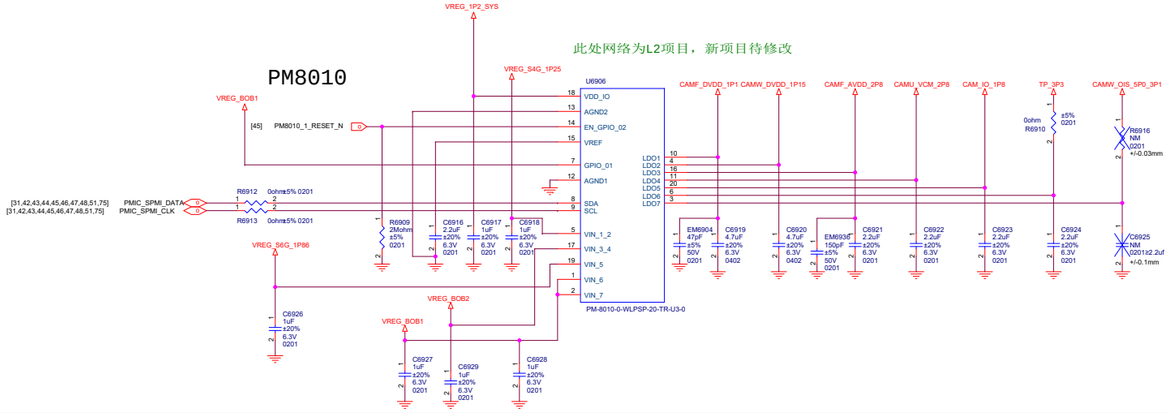

LDO1 1200mA
LDO2 1200mA
LDO3 300mA
LDO4 400mA
LDO5 600mA
LDO6 300mA
LDO7 600mA

Title	L2_MAIN	
Size A1	Document Number PM8008 & CAMERA LDOs	Rev
Date: Thursday, September 15, 2022	Sheet	

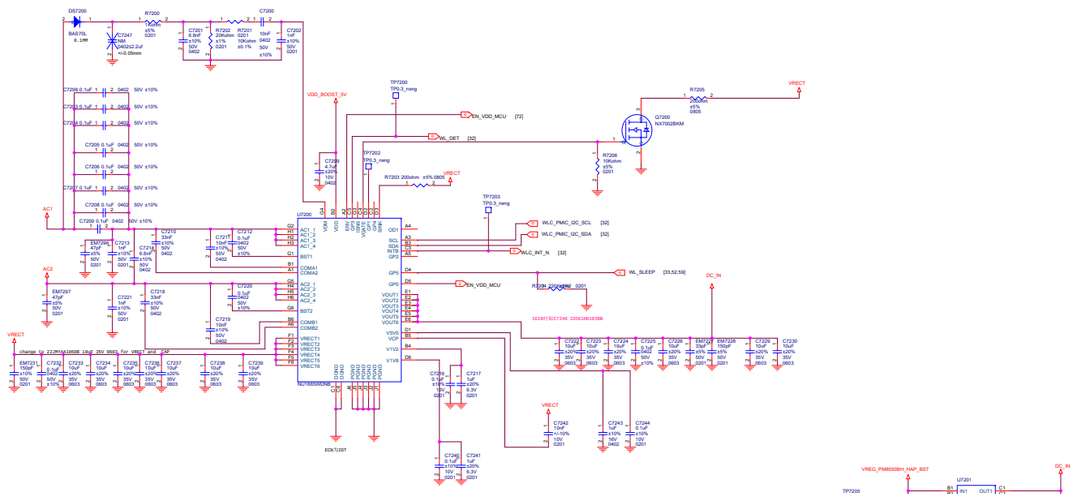

Title	L2_MAIN
Size	A0
Document Number	Reserved(Br WL POWER)
Rev	
Date:	Friday, September 16, 2022
Sheet	

屏蔽罩

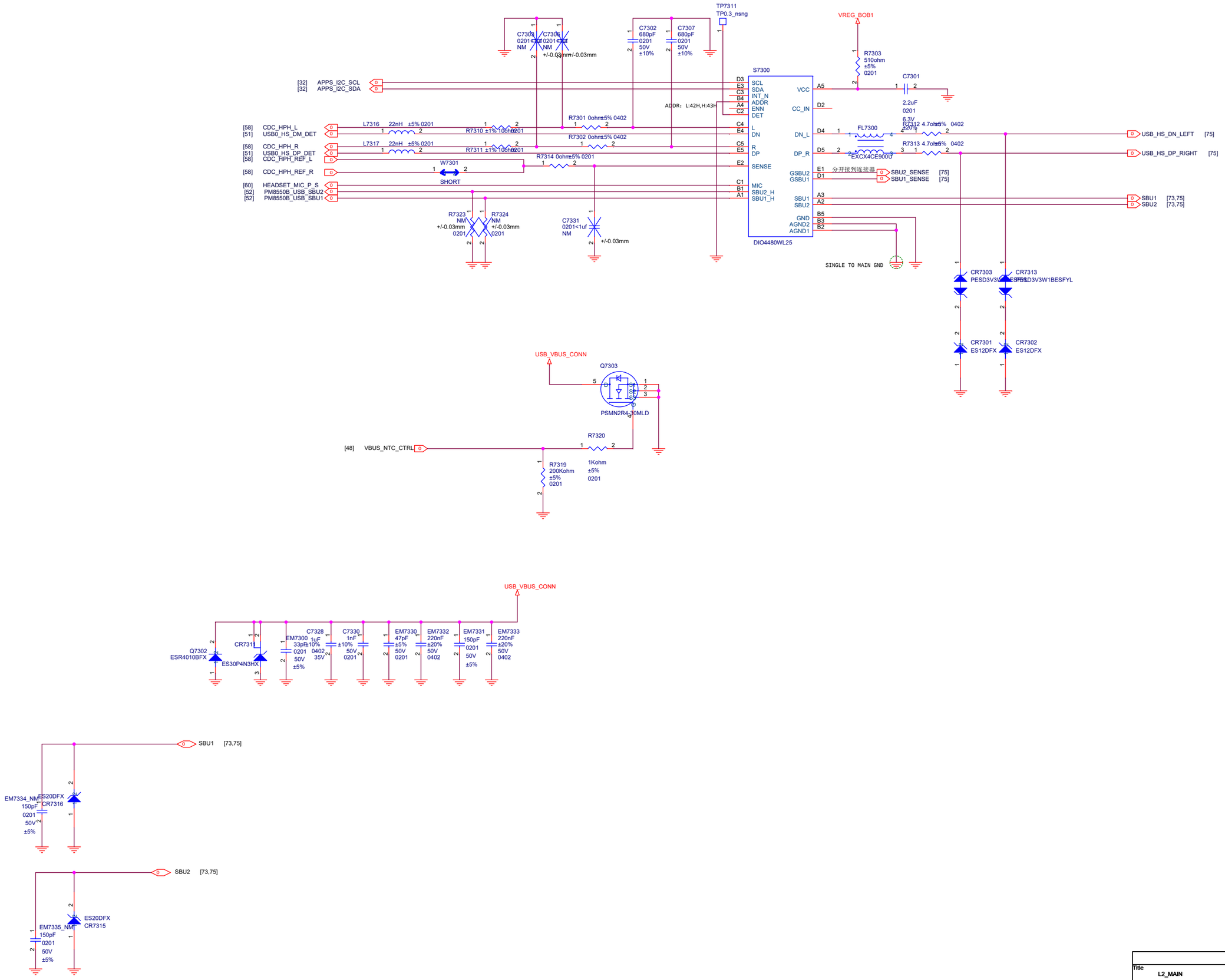

Title	L2_MAIN	
Size A2	Document Number TEST POINT	Rev
Date: Friday, September 16, 2022	Sheet 73 of	

735D

[31,42,43,44,45,46,47,48,51,69]	PMIC_SPMI_CLK	O	PAD_CR0.4	TP11161
[31,42,43,44,45,46,47,48,51,69]	PMIC_SPMI_DATA	O	PAD_CR0.4	TP11162
[42,43,44,45,46,47,48,51]	FAULT_N	O	PAD_CR0.4	TP11163
[42,43,44,45,46,47,48]	PMIC_RB	O	PAD_CR0.4	TP11164

SIM

NFC_SIMVCC2

[22]	NFC_SWIO_UICC2	O	PAD_CR0.4	TP10101
[22]	UIM2_DATA_1P8	O	PAD_CR0.4	TP10102
[22]	UIM2_RESET_1P8	O	PAD_CR0.4	TP10103
[22]	UIM2_CLK_1P8	O	PAD_CR0.4	TP10100
			PAD_CR0.4	TP10108

AUDIO

[60,75]	SPKR_OUT_P	O	PAD_CR0.4	TP10003
[60,75]	SPKR_OUT_P	O	PAD_CR0.4	TP10005
[60,75]	SPKR_OUT_N	O	PAD_CR0.4	TP10006
[60,75]	SPKR_OUT_N	O	PAD_CR0.4	TP10009
[60]	SPKR_SNS_N	O	PAD_CR0.4	TP10011
[60]	SPKR_SNS_P	O	PAD_CR0.4	TP10008

WCD_MIC_BIAS1

[58]	CDC_MIC1_N	O	PAD_CR0.4	TP10012
[58]	CDC_MIC1_P	O	PAD_CR0.4	TP10013
			PAD_CR0.4	TP10014
[58]	MBHC_HSDET_L	O	PAD_CR0.4	TP10701

TP

VREG_BOB1

	CHARGER_UART_TX	O	PAD_CR0.4	TP11302
	CHARGER_UART_RX	O	PAD_CR0.4	TP11303
[32]	DEBUG_UART_TX	O	PAD_CR0.4	TP11158
[32]	DEBUG_UART_RX	O	PAD_CR0.4	TP11049
[32,51]	FORCED_USB_BOOT	O	PAD_CR0.4	TP10001
[32]	SBU_UART_EN	O	PAD_CR0.4	TP10738
			PAD_CR0.4	TP11065

FLASH

[48]	FLASH_LED_THERM	O	PAD_CR0.4	TP10138
[48]	FLASH_LED1	O	PAD_CR0.4	TP10139
[48]	FLASH_LED2	O	PAD_CR0.4	TP11391

WIDE

[34]	CSI2_A0_CLK_M	O	PAD_CR0.4	TP10166
[34]	CSI2_B0_LN0_P	O	PAD_CR0.4	TP10167
[34]	CSI2_C0_LN0_M	O	PAD_CR0.4	TP10168
[34]	CSI2_A1_LN1_P	O	PAD_CR0.4	TP10169
[34]	CSI2_B1_LN1_M	O	PAD_CR0.4	TP10170
[34]	CSI2_C1_LN2_P	O	PAD_CR0.4	TP10171
[34]	CSI2_A2_LN2_M	O	PAD_CR0.4	TP10172
[34]	CSI2_B2_LN3_P	O	PAD_CR0.4	TP10173
[34]	CSI2_C2_LN3_M	O	PAD_CR0.4	TP10174

CAMW_DVDD_1P15 CAMW_VCM_3P1

VREG_BOB2 CAMW_OIS_SPC_3P1

CAM_IO_1P8

			PAD_CR0.4	TP10560
			PAD_CR0.4	TP11153
			PAD_CR0.4	TP10563
			PAD_CR0.4	TP10731
			PAD_CR0.4	TP11157
			PAD_CR0.4	TP11154

[32]	CAMW_AVDD1_EN	O	PAD_CR0.4	TP11155
[32]	CAMW_AVDD2_EN	O	PAD_CR0.4	TP11156
[33]	CAMW_MCLK	O	PAD_CR0.4	TP10552
[32,33]	CCI_I2C1_SDA	O	PAD_CR0.4	TP10553
[32,33]	CCI_I2C1_SCL	O	PAD_CR0.4	TP10554
[61,68]	OIS_SPI_CS_N	O	PAD_CR0.4	TP10555
[61,68]	OIS_SPI_CLK	O	PAD_CR0.4	TP10556
[61,68]	OIS_SPI_MOSI	O	PAD_CR0.4	TP10557
[33]	CAMW_RESET_N	O	PAD_CR0.4	TP10558

HAPTICS

[62]	HAP_OUT_P	O	PAD_CR0.4	TP11137
			PAD_CR0.4	TP11138
[62]	HAP_OUT_M	O	PAD_CR0.4	TP11139
			PAD_CR0.4	TP11140
HAP_OUT_PM8550BH_M		O	PAD_CR0.4	TP10660
			PAD_CR0.4	TP11112
HAP_OUT_PM8550BH_P		O	PAD_CR0.4	TP10508
			PAD_CR0.4	TP11159

SENSOR

VREG_L1B_1P8

VREG_L9B_3P0

[32]	FOD_RST	O	PAD_CR0.4	TP10076
[32]	FOD_SPI_MISO	O	PAD_CR0.4	TP10077
[32]	FOD_SPI_MOSI	O	PAD_CR0.4	TP10078
[32]	FOD_SPI_CLK	O	PAD_CR0.4	TP10079
[32]	FOD_SPI_CS	O	PAD_CR0.4	TP10080
[32]	FOD_INT_N	O	PAD_CR0.4	TP10081
			PAD_CR0.4	TP10082
			PAD_CR0.4	TP10085

VREG_L2B_3P0

[33]	TOF_INT	O	PAD_CR0.4	TP11170
[32]	TOF_XSHUT	O	PAD_CR0.4	TP11171
[01,32,33,61]	ALS_TOF_HALL_SAR_I2C_SCL	O	PAD_CR0.4	TP11166
[01,32,33,61]	ALS_TOF_HALL_SAR_I2C_SDA	O	PAD_CR0.4	TP11167
[32,33,61]	FLICKER_PRESSURE_SAR_I2C_SDA	O	PAD_CR0.4	TP11168
[32,33,61]	FLICKER_PRESSURE_SAR_I2C_SCL	O	PAD_CR0.4	TP11169
[32]	FLICKER_INT	O	PAD_CR0.4	TP10403
[32]	HALL_INTR2	O	PAD_CR0.4	TP11173
[32]	HALL_INTR1	O	PAD_CR0.4	TP11347
			PAD_CR0.4	TP11348

USB

USB_VBUS_CONN

[52,73]	USB_CC1	O	PAD_CR0.4	TP10015
[52,73]	USB_CC2	O	PAD_CR0.4	TP10016
[73]	SBU2	O	PAD_CR0.4	TP10017
[73]	SBU1	O	PAD_CR0.4	TP10018
[73]	USB_HS_DP_RIGHT	O	PAD_CR0.4	TP10019
[73]	USB_HS_DN_LEFT	O	PAD_CR0.4	TP10020
[73]	SBU1_SENSE	O	PAD_CR0.4	TP10021
[73]	SBU2_SENSE	O	PAD_CR0.4	TP10022
			PAD_CR0.4	TP10023
			PAD_CR0.4	TP10024
			PAD_CR0.4	TP10025
			PAD_CR0.4	TP10026
			PAD_CR0.4	TP10027
			PAD_CR0.4	TP10028
			PAD_CR0.4	TP10029
			PAD_CR0.4	TP10030
			PAD_CR0.4	TP10639
			PAD_CR0.4	TP10437
[52]	USB_CONN_THERM	O	PAD_CR0.4	TP11149

BAT CON

[52,59]	PACK_SNS_P	O	PAD_CR0.4	TP10037
[52,59]	PACK_SNS_M	O	PAD_CR0.4	TP10038
[48]	BATT_SCL	O	PAD_CR0.4	TP11148
[48]	BATT_SDA	O	PAD_CR0.4	TP11304

VBATT_CONN_M

			PAD_CR0.4	TP10054
			PAD_CR0.4	TP10055
			PAD_CR0.4	TP10056
			PAD_CR0.4	TP10057
			PAD_CR0.4	TP10058
			PAD_CR0.4	TP10059
			PAD_CR0.4	TP10060
			PAD_CR0.4	TP10061
			PAD_CR0.4	TP10062
			PAD_CR0.4	TP10063
			PAD_CR0.4	TP10064
			PAD_CR0.4	TP10065
			PAD_CR0.4	TP10066
			PAD_CR0.4	TP10067
			PAD_CR0.4	TP10068
			PAD_CR0.4	TP11051
			PAD_CR0.4	TP11052
			PAD_CR0.4	TP11053
			PAD_CR0.4	TP11054
			PAD_CR0.4	TP11055
			PAD_CR0.4	TP11056

WL

AC1

			PAD_CR0.4	TP10086
			PAD_CR0.4	TP10087
			PAD_CR0.4	TP10088
			PAD_CR0.4	TP10089
			PAD_CR0.4	TP10090

AC2

			PAD_CR0.4	TP10092
			PAD_CR0.4	TP10093
			PAD_CR0.4	TP10094
			PAD_CR0.4	TP10095
			PAD_CR0.4	TP10096

ANT

VREG_L15B_1P8

[01]	ANT4	O	PAD_CR0.4	TP11299
[01]	ANT6	O	PAD_CR0.4	TP11111
[01]	ANT1	O	PAD_CR0.4	TP10541
			PAD_CR0.4	TP11160

Ultra

[34]	CSI5_C2_LN3_M	O	PAD_CR0.4	TP11318
[34]	CSI5_B2_LN2_P	O	PAD_CR0.4	TP11319
[34]	CSI5_A2_LN2_M	O	PAD_CR0.4	TP11320
[34]	CSI5_C1_LN2_P	O	PAD_CR0.4	TP11321
[34]	CSI5_B1_LN1_M	O	PAD_CR0.4	TP11322
[34]	CSI5_A1_LN1_P	O	PAD_CR0.4	TP11323
[34]	CSI5_C0_LN0_M	O	PAD_CR0.4	TP11324
[34]	CSI5_B0_LN0_P	O	PAD_CR0.4	TP11325
[34]	CSI5_A0_CLK_M	O	PAD_CR0.4	TP11326
[34]	CSI5_NC_CLK_P	O	PAD_CR0.4	TP11344
[33]	CAMU_AVDD_EN	O	PAD_CR0.4	TP11346

CAMU_DVDD_1P05 CAMU_VCM_2P8

			PAD_CR0.4	TP11327
			PAD_CR0.4	TP11328

[32]	CAMU_MCLK	O	PAD_CR0.4	TP11335
[32]	CAMU_RESET_N	O	PAD_CR0.4	TP11336
[33]	CCI_I2C2_SDA	O	PAD_CR0.4	TP11337
[32,33]	CCI_I2C2_SCL	O	PAD_CR0.4	TP11338

			PAD_CR0.4	TP11254
			PAD_CR1_0x0_4_RE	TP11256
			PAD_CR1_0x0_4_RE	TP11258
			PAD_CR1_0x0_4_RE	
			PAD_CR0.4	TP10739
			PAD_CR1_0x0_4_RE	TP11262
			PAD_CR0.4	TP11301
			PAD_CR1_0x0_4_RE	TP11257
			PAD_CR1_0x0_4_RE	TP11263
			PAD_CR1_0x0_4_RE	TP11209
			PAD_CR1_0x0_4_RE	TP11210
			PAD_CR1_0x0_4_RE	TP11211
			PAD_CR1_0x0_4_RE	TP11212
			PAD_CR1_0x0_4_RE	TP11213
			PAD_CR1_0x0_4_RE	TP11219
			PAD_CR1_0x0_4_RE	TP11220
			PAD_CR1_0x0_4_RE	TP11221
			PAD_CR1_0x0_4_RE	TP11222
			PAD_CR1_0x0_4_RE	TP11223
			PAD_CR1_0x0_4_RE	TP11229
			PAD_CR1_0x0_4_RE	TP11230
			PAD_CR1_0x0_4_RE	TP11231
			PAD_CR1_0x0_4_RE	TP11232
			PAD_CR1_0x0_4_RE	TP11233
			PAD_CR1_0x0_4_RE	TP11289
			PAD_CR1_0x0_4_RE	TP11290
			PAD_CR1_0x0_4_RE	TP11291
			PAD_CR1_0x0_4_RE	TP11292
			PAD_CR1_0x0_4_RE	TP11293
			PAD_CR1_0x0_4_RE	TP11264
			PAD_CR1_0x0_4_RE	TP11266
			PAD_CR1_0x0_4_RE	TP11268
			PAD_CR1_0x0_4_RE	TP11270
			PAD_CR1_0x0_4_RE	TP11272
			PAD_CR1_0x0_4_RE	TP11265
			PAD_CR1_0x0_4_RE	TP11267
			PAD_CR1_0x0_4_RE	TP11269
			PAD_CR1_0x0_4_RE	TP11271
			PAD_CR1_0x0_4_RE	TP11214
			PAD_CR1_0x0_4_RE	TP11215
			PAD_CR1_0x0_4_RE	TP11216
			PAD_CR1_0x0_4_RE	TP11217
			PAD_CR1_0x0_4_RE	TP11218
			PAD_CR1_0x0_4_RE	TP11224
			PAD_CR1_0x0_4_RE	TP11225
			PAD_CR1_0x0_4_RE	TP11226
			PAD_CR1_0x0_4_RE	TP11227
			PAD_CR1_0x0_4_RE	TP11228
			PAD_CR1_0x0_4_RE	TP11234
			PAD_CR1_0x0_4_RE	TP11235
			PAD_CR1_0x0_4_RE	TP11236
			PAD_CR1_0x0_4_RE	TP11237
			PAD_CR1_0x0_4_RE	TP11238
			PAD_CR1_0x0_4_RE	TP11294
			PAD_CR1_0x0_4_RE	TP11295
			PAD_CR1_0x0_4_RE	TP11298
			PAD_CR1_0x0_4_RE	TP11274
			PAD_CR1_0x0_4_RE	TP11276
			PAD_CR1_0x0_4_RE	TP11275
			PAD_CR1_0x0_4_RE	TP11277
			PAD_CR1_0x0_4_RE	TP11279
			PAD_CR1_0x0_4_RE	TP11244
			PAD_CR1_0x0_4_RE	TP11248
			PAD_CR1_0x0_4_RE	TP11250
			PAD_CR1_0x0_4_RE	TP11252
			PAD_CR1_0x0_4_RE	TP11247
			PAD_CR1_0x0_4_RE	TP11249
			PAD_CR1_0x0_4_RE	TP11251
			PAD_CR1_0x0_4_RE	TP11253
			PAD_CR1_0x0_4_RE	TP11239
			PAD_CR1_0x0_4_RE	TP11240
			PAD_CR1_0x0_4_RE	TP11241
			PAD_CR1_0x0_4_RE	TP11242
			PAD_CR1_0x0_4_RE	TP11243
			PAD_CR1.0	TP10774
			PAD_CR0.4	TP10642
			PAD_CR0.4	TP10647
			PAD_CR0.4	TP10652
			PAD_CR0.4	TP10662
			PAD_CR0.4	TP10667
			PAD_CR0.4	TP10672
			PAD_CR0.4	TP10682
			PAD_CR0.4	TP10687
			PAD_CR0.4	TP10648
			PAD_CR0.4	TP10653
			PAD_CR0.4	TP10663
			PAD_CR0.4	TP10668
			PAD_CR0.4	TP10673
			PAD_CR0.4	TP10683
			PAD_CR0.4	TP10688
			PAD_CR0.4	TP10644
			PAD_CR0.4	TP10649
			PAD_CR0.4	TP10654
			PAD_CR0.4	TP10659
			PAD_CR0.4	TP10664
			PAD_CR0.4	TP10674
			PAD_CR0.4	TP10684
			PAD_CR0.4	TP10645
			PAD_CR0.4	TP10650
			PAD_CR0.4	TP10655
			PAD_CR0.4	TP10665
			PAD_CR0.4	TP10670
			PAD_CR0.4	TP10646
			PAD_CR0.4	TP10651
			PAD_CR0.4	TP10656
			PAD_CR0.4	TP10666
			PAD_CR0.4	TP10671
			PAD_CR0.4	TP10686
			PAD_CR0.4	TP10691
			PAD_CR1_0x0_4_RE	TP11175
			PAD_CR1_0x0_4_RE	TP11176
			PAD_CR1_0x0_4_RE	TP11177
			PAD_CR1_0x0_4_RE	TP11178
			PAD_CR0.4	TP10743
			PAD_CR0.4	TP10748
			PAD_CR0.4	TP10753
			PAD_CR0.4	TP10758
			PAD_CR0.4	TP10763
			PAD_CR0.4	TP10778
			PAD_CR0.4	TP10783
			PAD_CR0.4	TP10744
			PAD_CR0.4	TP10749
			PAD_CR0.4	TP10754
			PAD_CR0.4	TP10759
			PAD_CR0.4	TP10769
			PAD_CR0.4	TP10779
			PAD_CR0.4	TP10784
			PAD_CR0.4	TP10789
			PAD_CR0.4	TP10750
			PAD_CR0.4	TP10775
			PAD_CR0.4	TP10780
			PAD_CR0.4	TP10790
			PAD_CR0.4	TP10746
			PAD_CR0.4	TP10751
			PAD_CR0.4	TP10756
			PAD_CR0.4	TP10761
			PAD_CR0.4	TP10771
			PAD_CR0.4	TP10781
			PAD_CR0.4	TP10786
			PAD_CR0.4	TP10791
			PAD_CR0.4	TP10747
			PAD_CR1_0x0_4_RE	TP11179
			PAD_CR1_0x0_4_RE	TP11180
			PAD_CR1_0x0_4_RE	TP11181
			PAD_CR1_0x0_4_RE	TP11182
			PAD_CR1_0x0_4_RE	TP11183
			PAD_CR0.4	TP11351
			PAD_CR0.4	TP11354
			PAD_CR0.4	TP11355
			PAD_CR0.4	TP11357
			PAD_CR0.4	TP11358
			PAD_CR0.4	TP11359
			PAD_CR0.4	TP11361
			PAD_CR0.4	TP11362
			PAD_CR0.4	TP11363
			PAD_CR0.4	TP11364
			PAD_CR0.4	TP11365
			PAD_CR0.4	TP11366
			PAD_CR0.4	TP11367
			PAD_CR0.4	TP11368
			PAD_CR0.4	TP11369
			PAD_CR0.4	TP11370
			PAD_CR0.4	TP11371
			PAD_CR0.4	TP11373
			PAD_CR0.4	TP11375
			PAD_CR0.4	TP11377
			PAD_CR0.4	TP11379
			PAD_CR0.4	TP11381
			PAD_CR0.4	TP11383
			PAD_CR0.4	TP11385
			PAD_CR0.4	TP11387
			PAD_CR0.4	TP11389
			PAD_CR0.4	TP11374
			PAD_CR0.4	TP11376
			PAD_CR0.4	TP11378
			PAD_CR0.4	TP11380
			PAD_CR0.4	TP11382
			PAD_CR0.4	TP11384
			PAD_CR0.4	TP11386
			PAD_CR0.4	TP11388
			PAD_CR0.4	TP11390
			PAD_CR1_0x0_4_RE	TP11184
			PAD_CR1_0x0_4_RE	TP11185
			PAD_CR1_0x0_4_RE	TP11186
			PAD_CR1_0x0_4_RE	TP11187
			PAD_CR1_0x0_4_RE	TP11188
			PAD_CR1_0x0_4_RE	TP11421
			PAD_CR1_0x0_4_RE	TP11245
			PAD_CR1_0x0_4_RE	TP11246
			PAD_CR1_0x0_4_RE	TP11420
			PAD_CR0.4	TP11396
			PAD_CR0.4	TP11397
			PAD_CR0.4	TP11398
			PAD_CR0.4	TP11422
			PAD_CR0.4	TP11423
			PAD_CR1_0x0_4_RE	TP11409
			PAD_CR1_0x0_4_RE	TP11410
			PAD_CR1_0x0_4_RE	TP11411
			PAD_CR1_0x0_4_RE	TP11412
			PAD_CR1_0x0_4_RE	TP11413
			PAD_CR1_0x0_4_RE	TP11399
			PAD_CR1_0x0_4_RE	TP11400
			PAD_CR1_0x0_4_RE	TP11401
			PAD_CR1_0x0_4_RE	TP11402
			PAD_CR1_0x0_4_RE	TP11403
			PAD_CR1_0x0_4_RE	TP11189
			PAD_CR1_0x0_4_RE	TP11190
			PAD_CR1_0x0_4_RE	TP11191
			PAD_CR1_0x0_4_RE	TP11192
			PAD_CR1_0x0_4_RE	TP11193
			PAD_CR1_0x0_4_RE	TP11414
			PAD_CR1_0x0_4_RE	TP11415
			PAD_CR1_0x0_4_RE	TP11416
			PAD_CR1_0x0_4_RE	TP11417
			PAD_CR1_0x0_4_RE	TP11418
			PAD_CR1_0x0_4_RE	TP11404
			PAD_CR1_0x0_4_RE	TP11405
			PAD_CR1_0x0_4_RE	TP11406
			PAD_CR1_0x0_4_RE	TP11407
			PAD_CR1_0x0_4_RE	TP11408
			PAD_CR1_0x0_4_RE	TP11194
			PAD_CR1_0x0_4_RE	TP11195
			PAD_CR1_0x0_4_RE	TP11196
			PAD_CR1_0x0_4_RE	TP11197
			PAD_CR1_0x0_4_RE	TP11198
			PAD_CR0.4	TP11305
			PAD_CR0.4	TP11306
			PAD_CR0.4	TP11307
			PAD_CR0.4	TP11308
			PAD_CR0.4	TP11309
			PAD_CR0.4	TP11310
			PAD_CR0.4	TP11311
			PAD_CR0.4	TP11312
			PAD_CR0.4	TP11313
			PAD_CR0.4	TP11314
			PAD_CR0.4	TP11315
			PAD_CR0.4	TP11316
			PAD_CR0.4	TP11349
			PAD_CR0.4	TP11350
			PAD_CR1_0x0_4_RE	TP11199
			PAD_CR1_0x0_4_RE	TP11200
			PAD_CR1_0x0_4_RE	TP11201
			PAD_CR1_0x0_4_RE	TP11202
			PAD_CR1_0x0_4_RE	TP11203
			PAD_CR1_0x0_4_RE	TP11204
			PAD_CR1_0x0_4_RE	TP11205
			PAD_CR1_0x0_4_RE	TP11206
			PAD_CR1_0x0_4_RE	TP11207
			PAD_CR1_0x0_4_RE	TP11208

Title	L2_MAIN	
Size A1	Document Number INTERPOSER PIN	Rev
Date: Friday, July 29, 2022	Sheet	

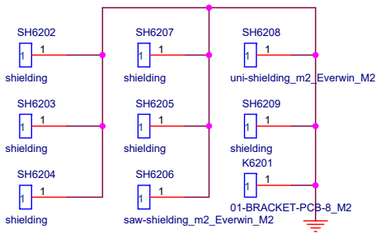

Title	L2_MAIN	
Size C	Document Number LGA PIN	Rev
Date: Friday, July 29, 2022	Sheet 76	